Overview

Modeling techniques in Fusion 360

Modeling in Fusion 360 is quite a different experience from how you would model in conventional history-based CAD software. Some users have expressed that it is a different mindset, but once they get it, it makes so much more sense to them. Modeling in Fusion 360 is essentially a series of workflows that include a whole bunch of different commands, and when they're used together, it makes the experience faster, easier, and more intuitive. In many cases, bodies, sketches, and planes in Fusion 360 can be used not only to help create additional geometry, but also help subtract geometry. In this module, you are introduced to this mindset.

Learning Objectives

In this section you will learn how to:

- Create a new design in the model workspace
- Create bodies
- Modify your design
- Add features to a sculpted body

Modeling from a sketch

Bicycle rocker arm

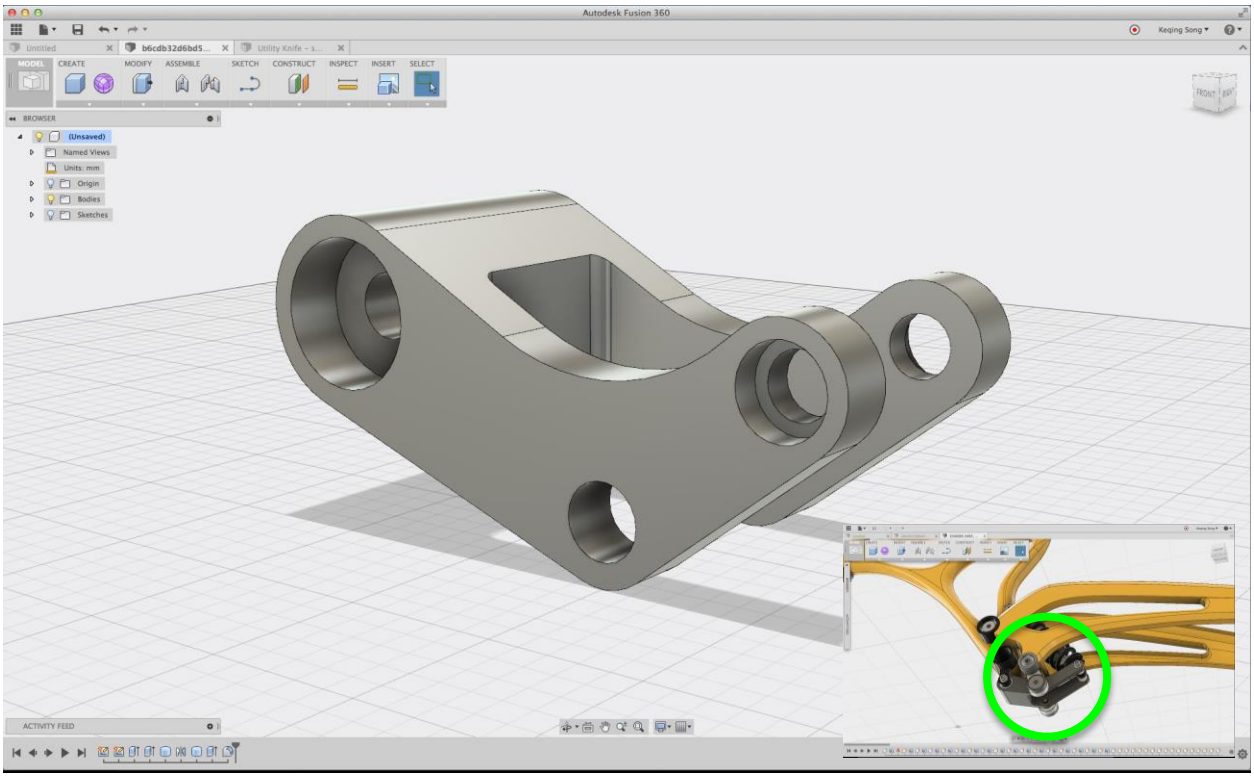

Before moving on, make sure you have uploaded **04_Model_from_sketch** design to your A360 site.

If you like to watch the video to this tutorial, click here: **Launch Video**

Open Fusion 360 design file: In this section you will open the introductory design file.

Step 1 – Open the Data Panel 1. Open the Data Panel by clicking on the icon located at the top left of the menu bar. 2. The Data Panel will slide open.	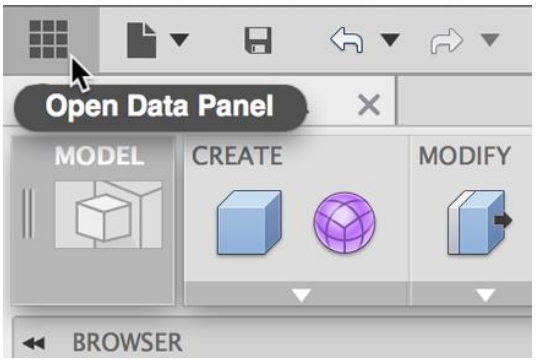
Step 2 – Open the design *In this module we will be using the* **04_Model_from_sketch.*f3d*** *file to complete the exercise. If you haven't set up a new project and uploaded the necessary designs, please follow the steps in the Introduction module.* 1. At the top left of the Data Panel, select the project where you uploaded the **04_Model_from_sketch.f3d** file. 2. Navigate to this design and either **double-click** or **right-click** and select **open.** 3. When the design has opened in your modeling window, click on the icon to close the Data Panel.	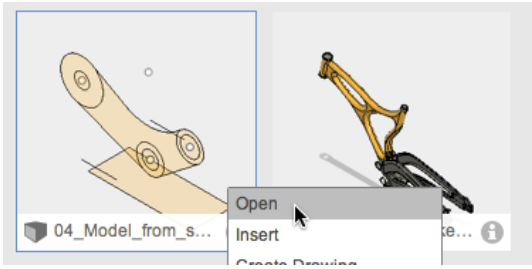

Create solid body: Let's start with this sketch of the rocker arm. We're going to use this to create a solid body.

Step 1 – Select profiles 1. Hold down **Shift** and select the profiles shown in the image. Make sure that the 3 center holes are the only profiles not selected. Note: If you are having trouble selecting certain profiles, zoom in closer and that should make it easier to select.	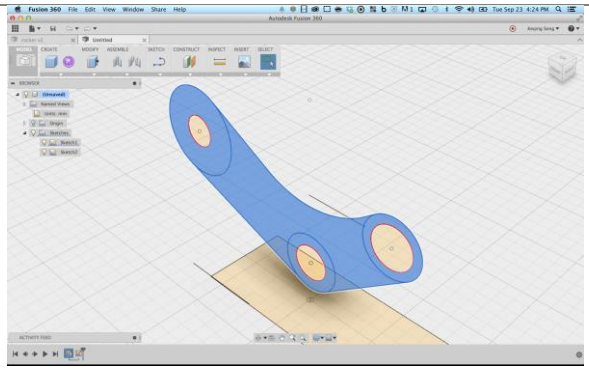

Step 2 – Start the Extrude command 1. Click **Create > Extrude**. We're going to extrude the selected profiles.	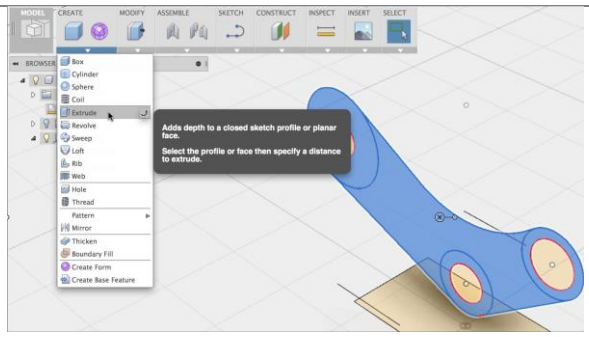
Step 3 – Set the extrude options 1. Set Direction to **Two Side.** 2. Set Extents to **To.**	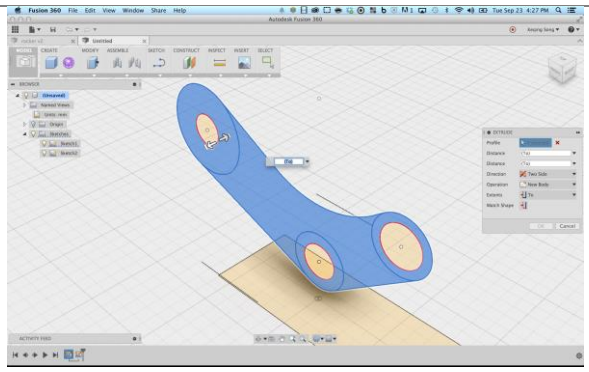
Step 4 – Set the distance for the left side 1. Click once on the **left arro**w manipulator 2. Now hover over the **line sketch** on the left side and click on the **end point**. Note: Make sure you select the line sketch and not the rectangle sketch. When you've done this, the extrusion will automatically terminate at that point, hence why we selected the Extents as To.	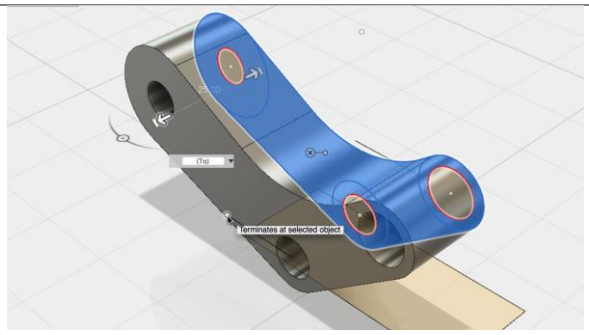
Step 5 – Set the distance for the right side 1. Repeat Step 4, but now for the right side. 2. Click **OK** to finish the extrusion. You now should have the basic shape of the rocker arm. Note: Line sketches can be used for a variety of different tasks, such as reference lines for other tasks, as well as creating geometry.	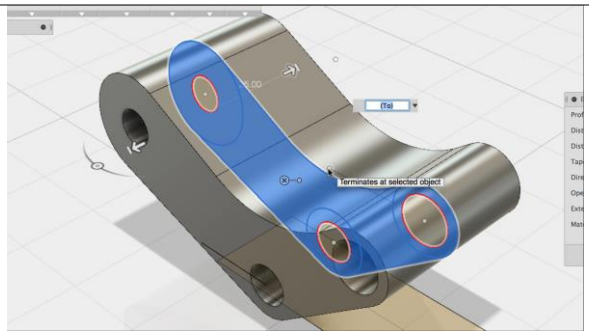

Cut holes: In this section you use the sketch profiles to cut holes in the body.

Step 1 – Start the Extrude command 1. Go to the browser and click the light bulb next to Sketches to turn the visibility on. 2. Go to the ViewCube and select the **FRONT** view. 3. Click on the right-most circle sketch profile so that it is selected. 4. Right-click and select the **Extrude** command.	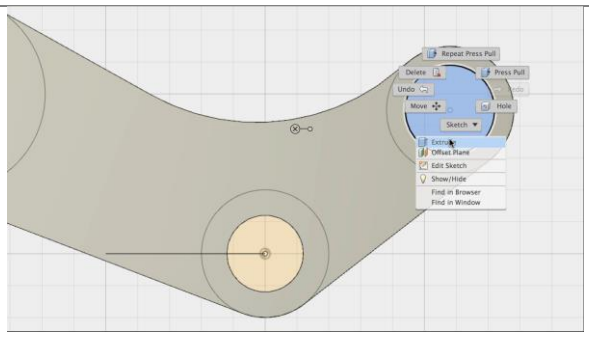
Step 2 – Set the extrude options 1. Set Direction to **Symmetric** 2. Set Operation to **Join** 3. Set Extents to **Distance** 4. Use the arrow manipulator and drag the arrow out to **20.00 mm**. 5. Click **OK** to finish.	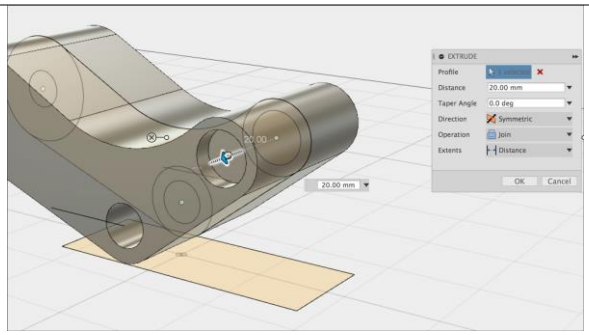
Step 3 – Start the Cylinder command 1. Click Create > Cylinder. We're going to use the **Cylinder** command to cut a counter-bore for the hole on the far left.	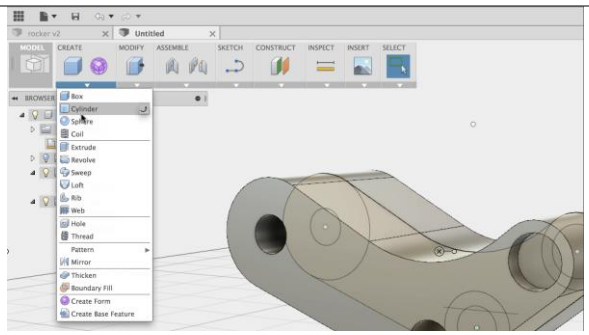
Step 4 – Define the cylinder 1. Click the outer most surface to place your cylinder. 2. Hover over the left circle sketch profile until you see a small blue circle snap on the center point of the circle sketch. 3. Click once and move the cursor outward until you reach **24 mm**. 4. Click one more time to set the diameter. Note: You can also enter the value and then hit **Enter** twice.	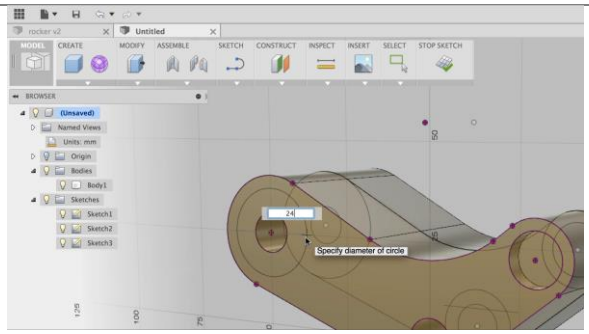

Step 5 – Set the cut distance 1. Use arrow manipulator and drag it inward to **– 10 mm**. 2. Click **OK** to finish the cut. Note: This naturally became a cut because the software recognized that the cylinder body is intersecting with an existing body, thus assumed that you wanted a cut.	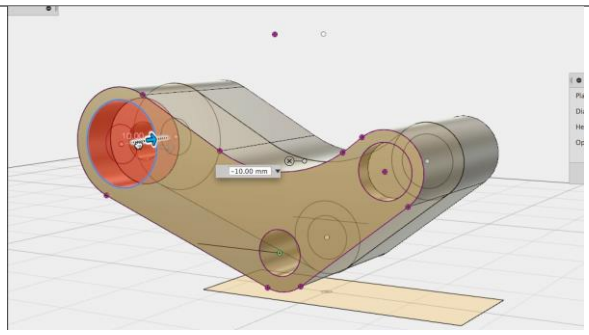
Step 6 – Start the mirror command Now let's mirror this cut on the other side. 1. Click **Create > Mirror**.	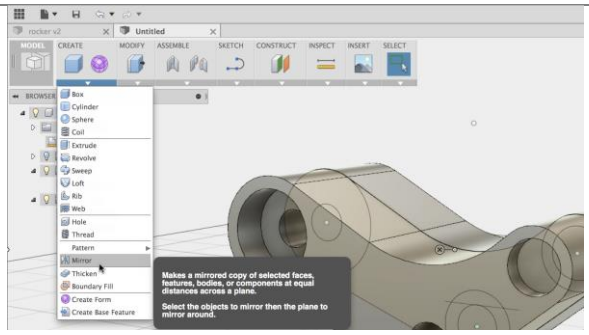
Step 7 – Select the operation to mirror 1. Go to the timeline at the bottom and select the **cylinder operation** we just created as the feature to mirror.	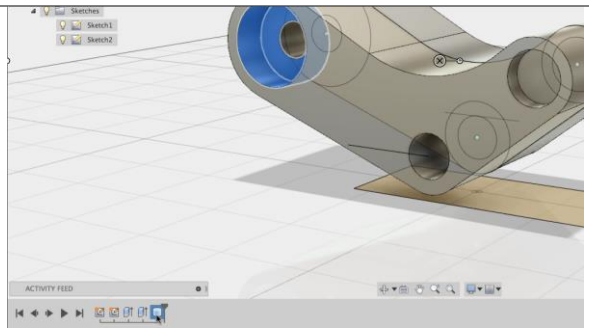
Step 8 – Select the mirror plane 1. Go to the browser and click the light bulb next to Origin to turn the visibility on. 2. In the dialog box, make sure **Mirror Plane** is selected. 3. Select the plane that is in the **middle of the rocker body** as the mirror plane. Note: If you're having trouble selecting the plane, hover over it, click and hold the click. A dialog will display and allow you to choose what you want to select.	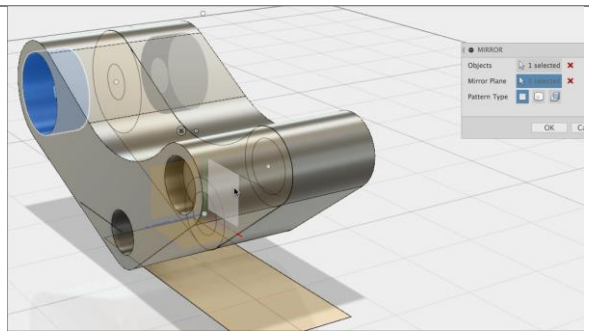

Notice that the other side has been successfully mirrored to have the same counter bore hole.	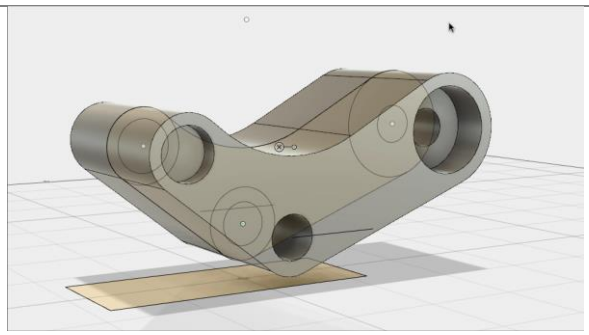
Step 9 – Start the Cylinder command Now let's punch a hole through the far right circular cut. 1. Click **Create > Cylinder**. Note: The Cylinder command is one of many versatile tools where it can be used for a number of tasks – new bodies as well as Boolean cuts.	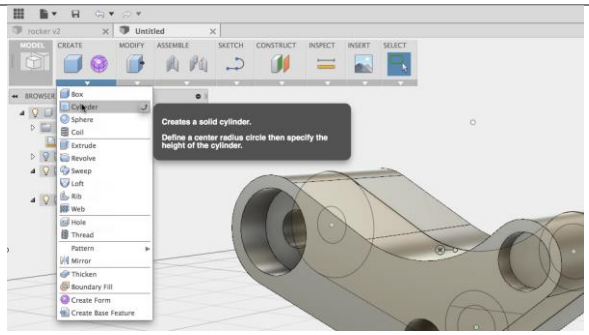
Step 10 – Set the diameter of the cylinder 1. Place the cylinder at the **center point** of the inner circle. 2. Click once to confirm the placement of the cylinder. 3. Move the cursor outward until you reach **10 mm**. Click once to confirm the size. Note: You can also enter the value and then hit **Enter** twice.	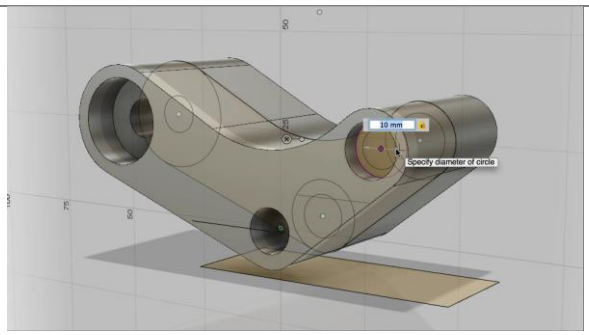
Step 11 1. Use the arrow manipulator and drag it across to the other side. Don't worry about the depth of the cut, as long as it is through the entire body. 2. Click **OK** to finish.	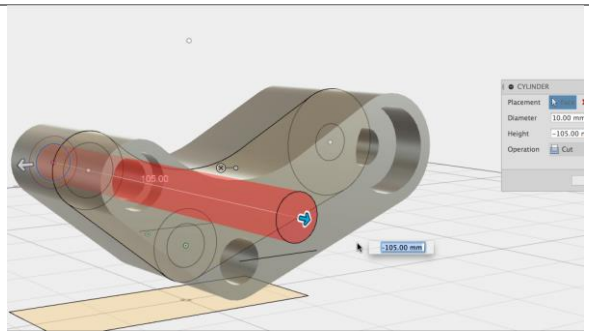

Remove geometry for a slot: In this section you use a sketch to cut material from the body, creating a slot.

Step 1 – Start Extrude using Press Pull 1. We're now going to use the rectangle sketch to cut the arms out. Select the rectangular sketch. 2. Right-click and select **Press Pull**. Note: Press Pull is similar to Extrude, but it is somewhat of a hybrid command, where it is aware of what you want to Press Pull, and will turn into the appropriate command for that task.	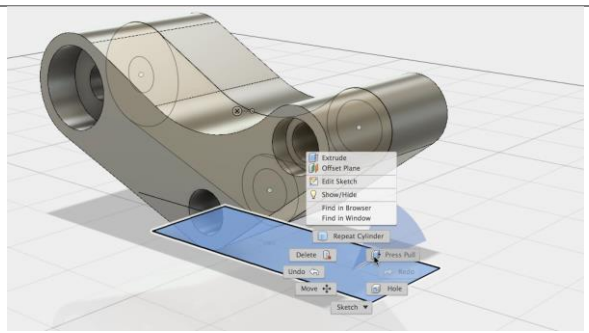
Step 2 – Set the extrude options 1. Set Operation to **Cut**. 2. Set Extents to **All**. 3. Click **OK** to finish the command. This will use the rectangle sketch profile and cut the rocker all the way through.	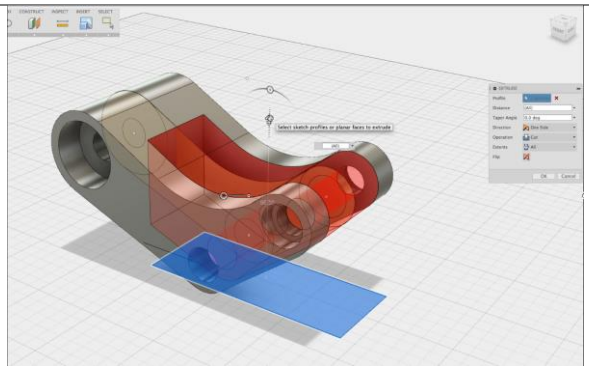

Fillet sharp edges: Now we finish off the design by adding fillets to round off sharp corners.

Step 1 – Start the Fillet command We're now going to add a couple fillets on the inner edges of the rocker arm. 1. Hold the **Shift** key and select the two edges shown in the image. 2. Right-click and select **Fillet**.	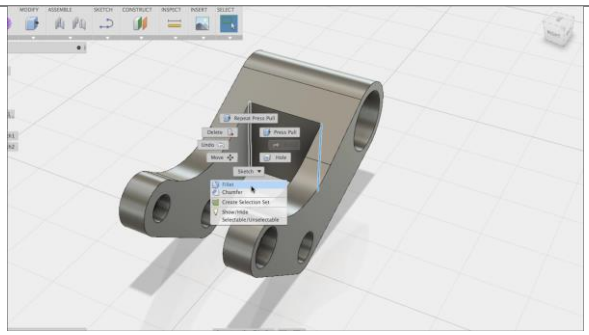
Step 2 – Set the fillet radius 1. Use the arrow manipulator and drag it to **2.50 mm**. 2. Click **OK** to finish.	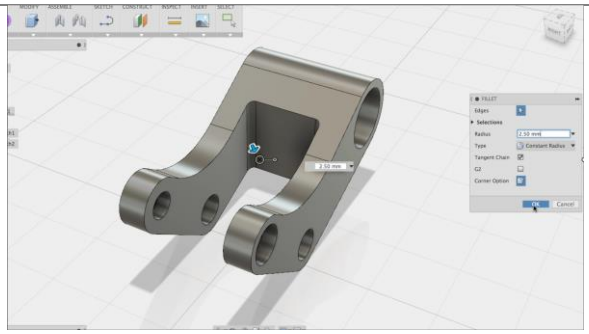

Good job! We've successfully modeled the rocker arm from a sketch. You're now ready to move onto the next part.	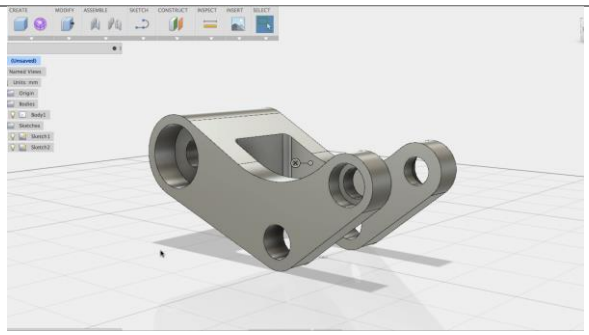

Model from a Sculpted body

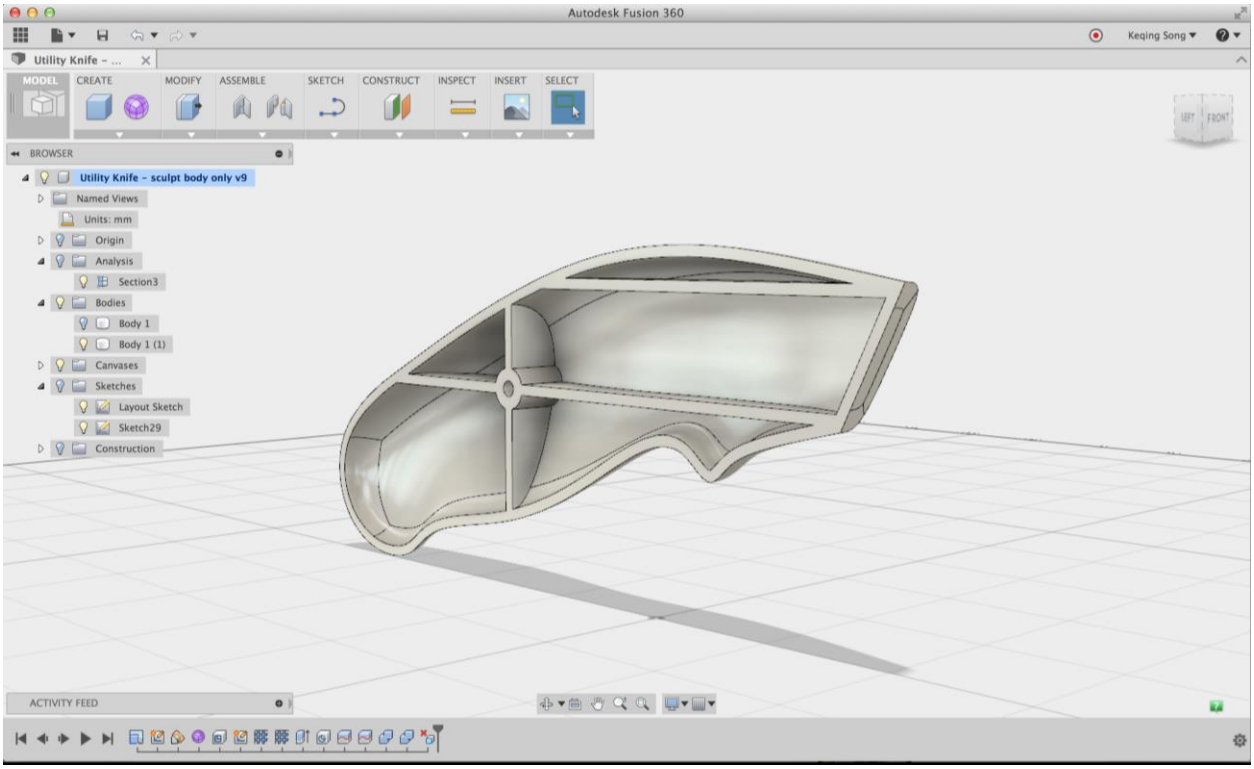

In this part of the modeling module, we're going to move away from the rocker arm and work on a sculpted utility knife handle. We're going to look at how to create mechanical features based on a sculpted body. We'll be using tools that we used in the previous lesson, as well as learn some new ones.

Before moving on, make sure you have the **04_model_from_sculpted_body** design open and in your design environment.

If you like to watch the video to this tutorial, click here: **Launch Video**

Open Fusion 360 design file: In this section you will open the introductory design file.

Step 1 – Open the Data Panel 3. Open the Data Panel by clicking on the icon located at the top left of the menu bar. 4. The Data Panel will slide open.	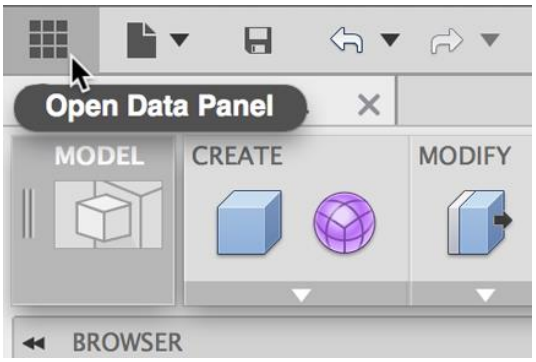
Step 2 – Open the design *In this module we will be using the* **04_model_from_sculpted_body.*f3d*** *file to complete the exercise. If you haven't set up a new project and uploaded the necessary designs, please follow the steps in the Introduction module.* 4. At the top left of the Data Panel, select the project where you uploaded the **04_Model_from_sculpted_body.f3d** file. 5. Navigate to this design and either **double-click** or **right-click** and select **open.** 6. When the design has opened in your modeling window, click on the icon to close the Data Panel.	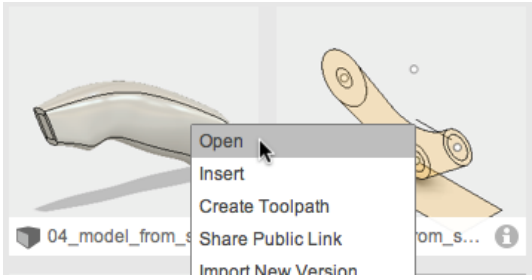

Shell a sculpted body: In this section you hollow out a body using the shell command.

Step 1 – Start the Shell command Let's start by first shelling the body. 1. Click **Modify > Shell**.	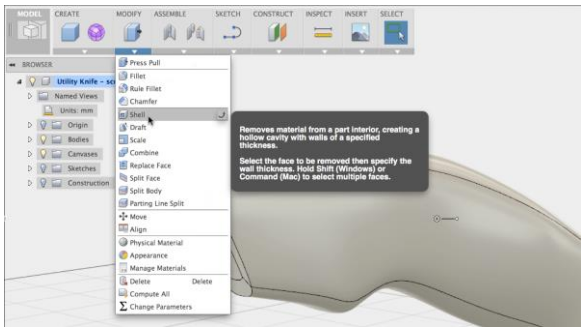

Step 2 – Select the body 1. Go to the browser and locate the knife body. 2. Click it once to select it as the body to shell.	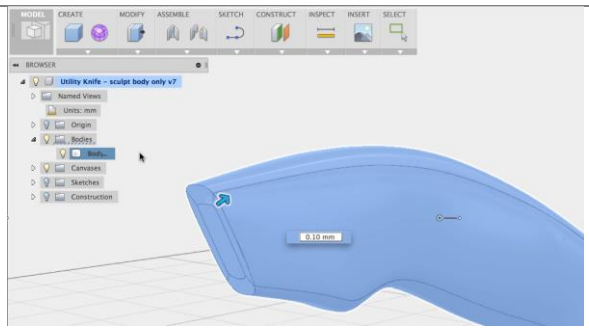
Step 3 – Set the shell thickness 1. Instead of using the arrow manipulator, go to the floating command dialog and change the value to **2 mm**. 2. Press **Enter** to finish the command. Now that the body is shelled, we're going to begin creating features on the inside.	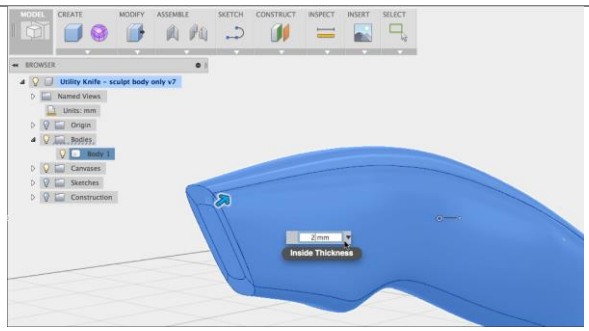
Step 4 – Create a section view 1. To see the inside, click **Inspect > Section Analysis**. Note: Section Analysis let's you see a section of the model based on a reference plane or surface. It does not affect the geometry of the body.	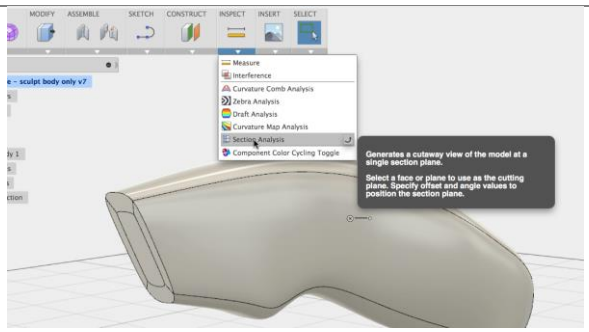
Step 5 – Select the section plane 1. Go to the browser and turn on the **Origin** planes. 2. Select the plane that is in the middle of the knife body, parallel to the length of the model. Click **OK** to confirm. You should see half of the shelled model.	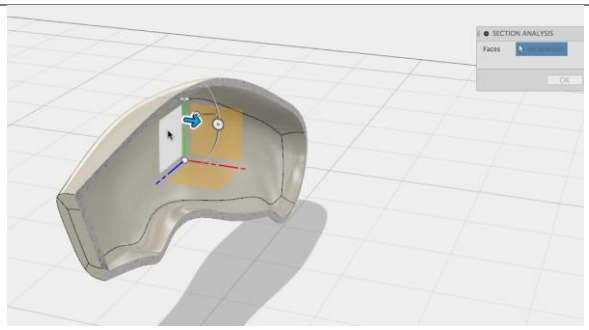

Create a sketch: In this section you create a 2D sketch that will be used for web features.

Step 1 – Create a sketch We're now going to set up some web features. 1. Go to the **RIGHT** view on the ViewCube. 2. Click **Sketch > Line**.	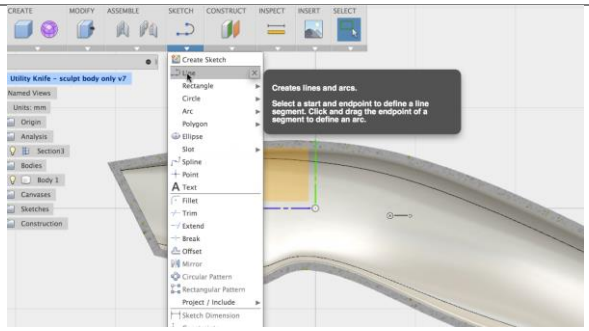
Step 2 – Select the sketch plane 1. Choose the plane that is parallel to the section view.	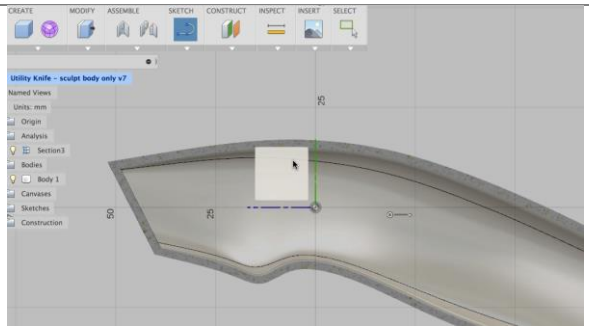
Step 3 – Turn on the visibility of sketches 1. Go to the browser and turn on **Sketches**. You should see some profile sketches that have been already created. We're going to use them as references for our line sketch.	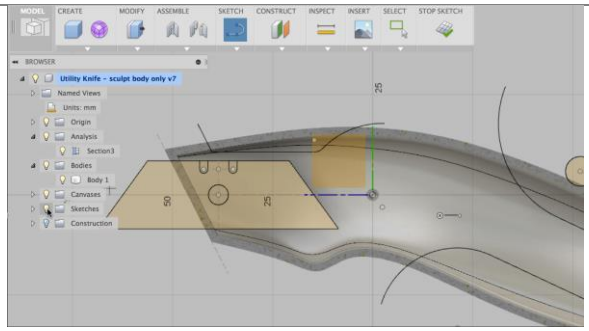
Step 4 – Pick the start point of the line 1. Hover over to the top of the blade profile until your cursor snaps to a grid intersection. Make sure that it is outside the knife body. 2. Click once to place the start of your line. If you're having trouble snapping to the grid intersection, zoom in and the grid will scale accordingly.	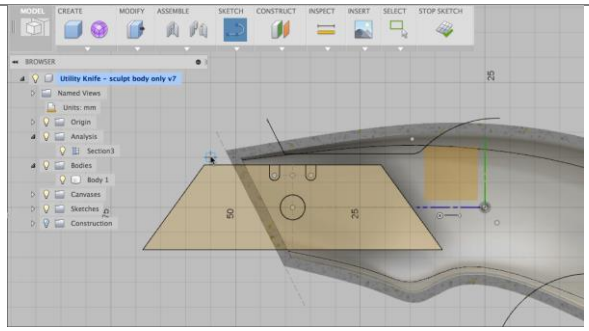

Step 5 – Pick the end point of the line 1. Stretch line across the knife body until it is on the other side. 2. Click to place the end point of the line. 3. Press **ESC** key to end the command.	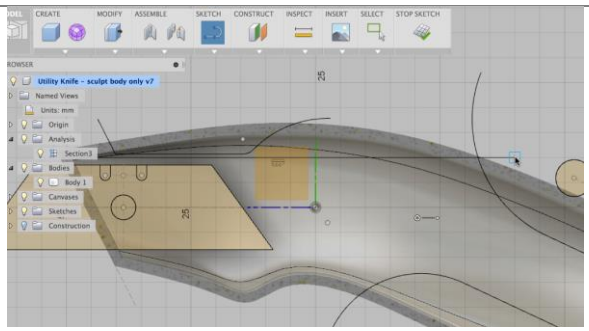
Step 6 – Repeat the line command 1. Right click and select **Repeat Line** to reuse the Line command.	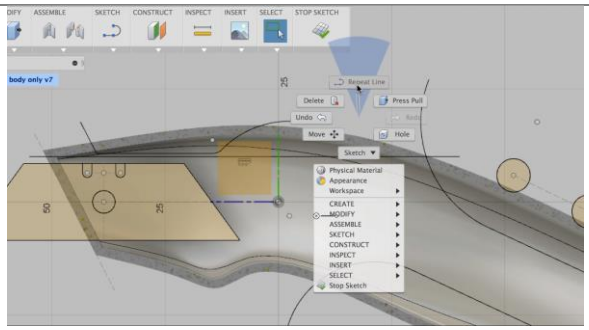
Step 7 – Pick the start point 1. Now repeat the same task at the bottom of the blade sketch profile. Snap to a grid intersection. 2. Click to place the starting point of the line.	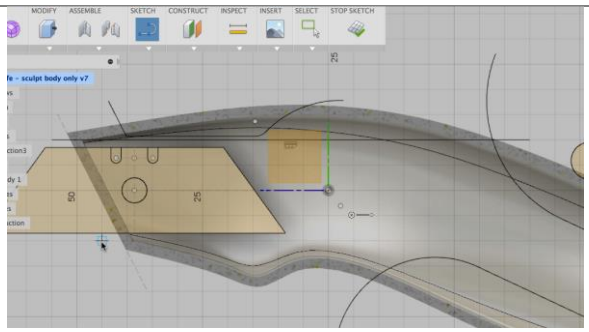
Step 8 – Pick the end point 1. Extend the line across the knife body until it reaches past the last circle sketch profile. Snap to a grid intersection 2. Click to place the end point of the line. 3. Press **Esc** to end the command.	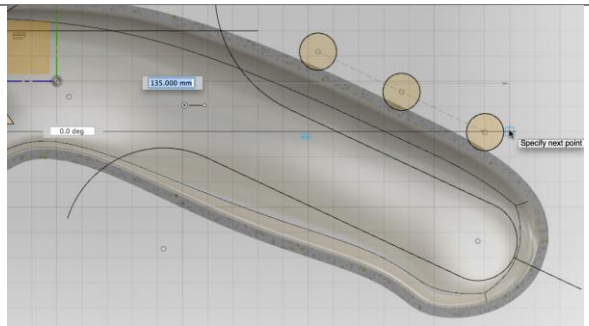

Step 9 – Repeat the line command 1. Right click and select **Repeat Line** to reuse the Line command.	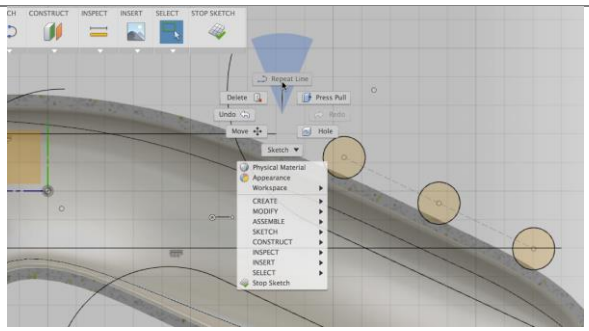
Step 10 – Pick the start point and end point 1. Draw a line that is perpendicular to the first and second line, making sure that it also extends past the knife body. 2. When you're done placing the end point of the 3rd line, press **STOP SKETCH** to end sketching.	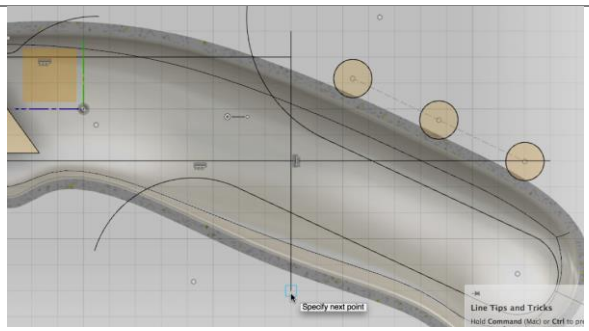

Create a web: In this section you create a strengthening web from a 2D sketch.

Step 1 – Start the Web command We're now ready to model the webs. 1. Click **Create > Web**.	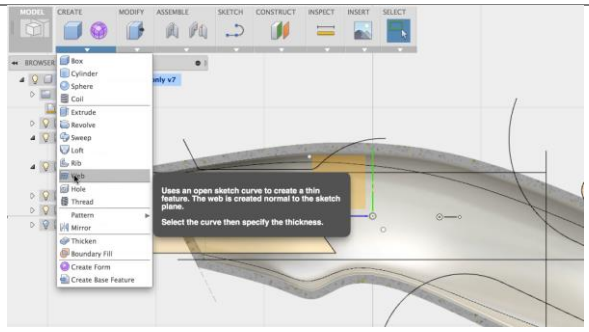
Step 2 – Select the web profiles 1. Click on the 3 line sketches you just made so that they are selected as the reference lines for your web.	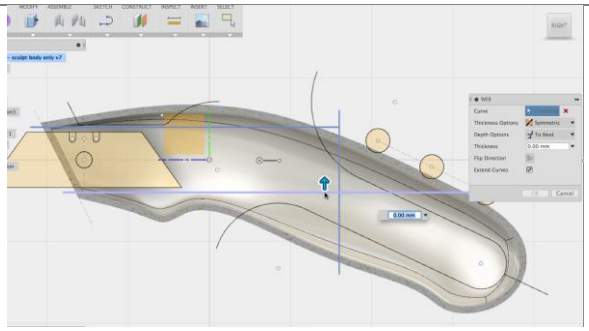

Step 3 – Set the web thickness 1. Change the thickness value to **2 mm**. 2. Press **Enter** to finish the command.	

Create another web: In this section you create a web on the opposite side of the design.

Step 1 – Find the section analysis in the browser Now that you've created webs for one side, you'll need to duplicate the task on the other. We're going to do this by editing the **Section Analysis.** 1. Go to the browser and expand the Analysis folder.	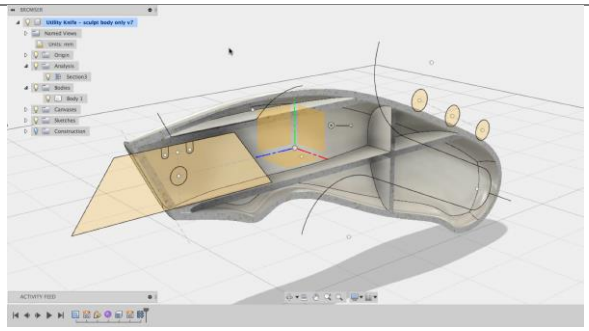
Step 2 – Edit the section analysis 1. Right click on the analysis and select **Edit**.	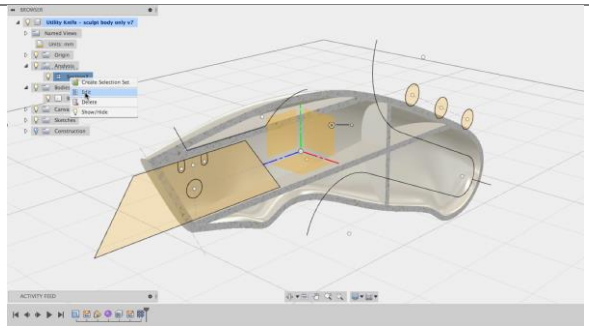
Step 3 – De-select the section plane 1. In the dialog box, click the red **X** to de-select previously selected plane.	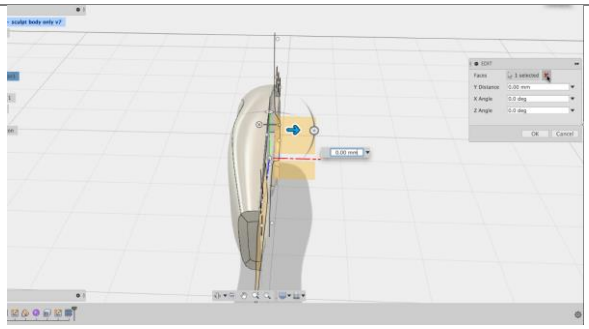

Step 4 – Select a new section plane 1. Rotate the model around to the Left side. 2. Select the left side of the middle plane.	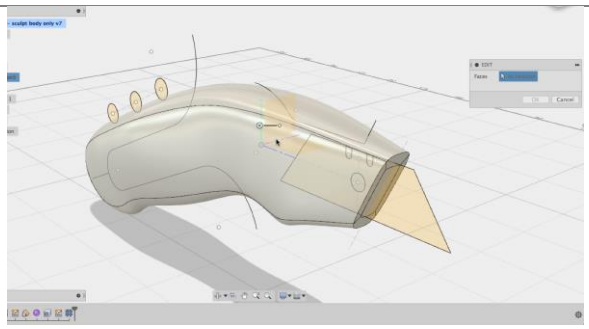
Step 5 – Finish the edit 1. You should be seeing the other half without the webs. Click **OK** to finish.	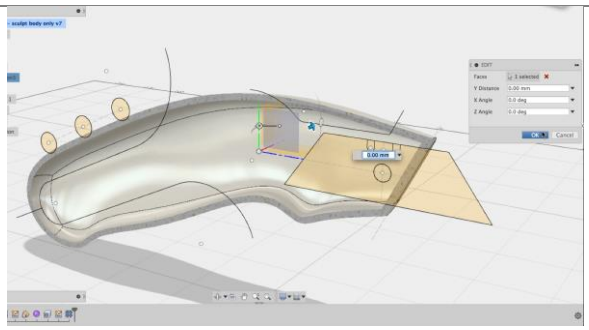
Step 6 – Display the web sketch 1. Go to the browser and turn on the sketch for the web.	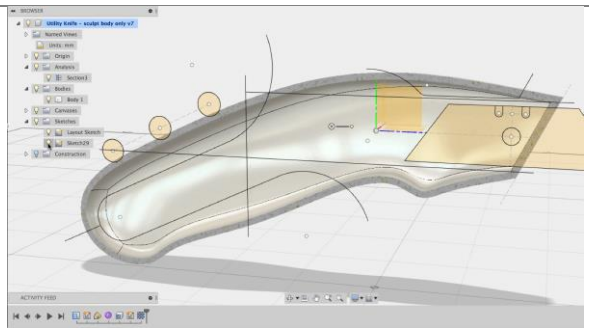
Step 7 – Create another web 1. Click **Create > Web**. 2. Select the 3 line sketches. 3. Before setting a thickness, click **Flip Direction** in the dialog box so that the webs will be going in the right direction.	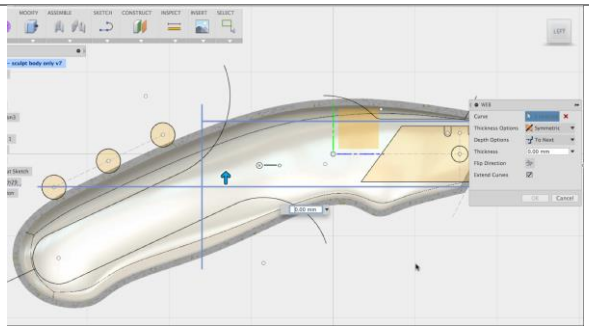

Step 8 – Set the web thickness 1. Set the thickness to **2 mm**. 2. Click **OK** to finish. You now have webs on both sides of the model.	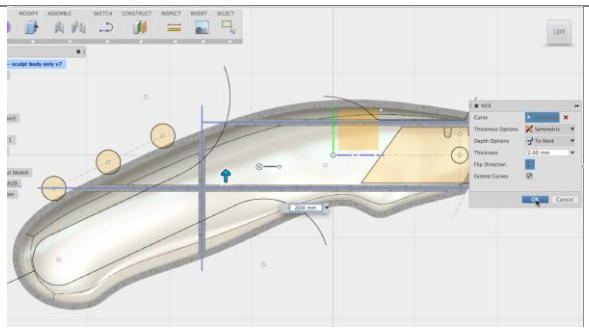

Create a boss: In this section you create a boss on the web features.

Step 1 – Sketch a circle We're now going to create a boss hole right in the middle of where the webs intersect. 1. Click **Sketch > Circle> Center Diameter Circle**.	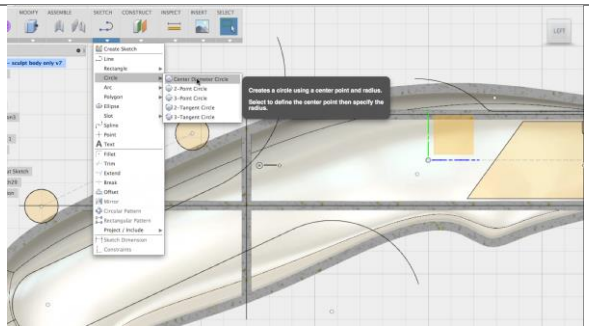
Step 2 – Select the sketch plane 1. Click on the plane where the web line sketches were drawn 2. Hover the cursor at the intersection until the cursor snaps to the center. Click to place your circle there.	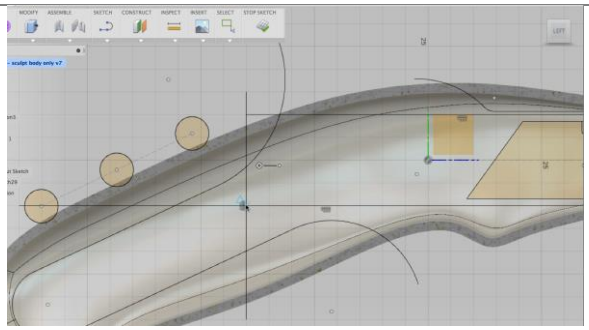
Step 3 – Finish the sketch 1. Enter a value of **8 mm** as the diameter. 2. Press **Enter** to confirm. 3. Click **STOP SKETCH** to exit the Sketch environment.	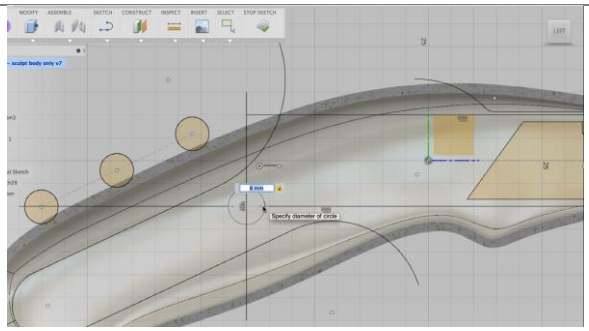

Step 4 – Select the sketch profile We're now going to create a cylinder using the circle sketch profile. 1. Select the entire circle profile. Hold the **Shift** key to add onto each selection.	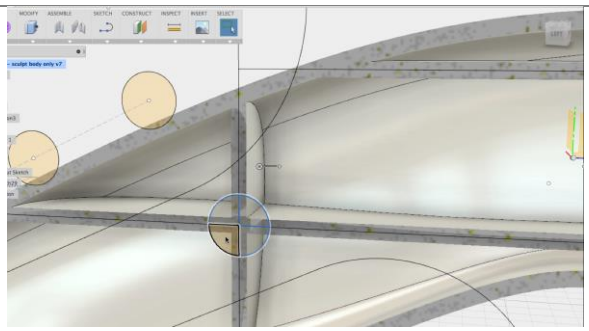
Step 5 – Start the Extrude command 1. Right click on the selected circle profile and select **Extrude**.	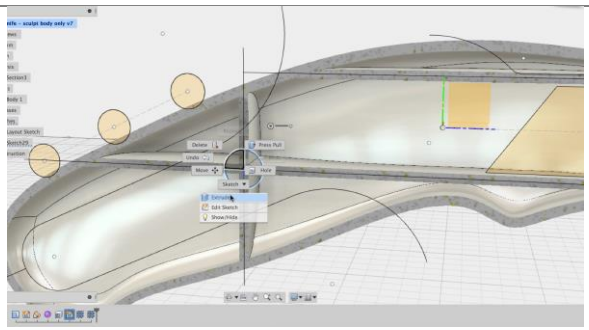
Step 6 – Set extrude options 1. In the dialog box, set the Direction to **Symmetric**. 2. Drag the arrow manipulator to a value of **19 mm**.	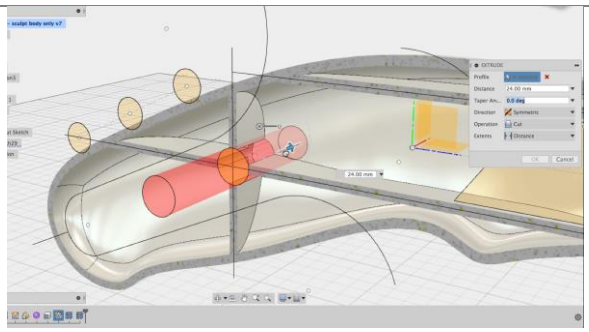
Step 7 – Set extrude options 1. Change the Operation from Cut to **New Body**. 2. Click **OK** to finish.	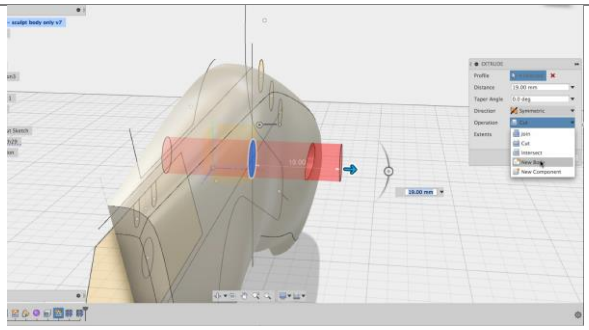

Step 8 – Turn off the analysis 1. In the browser, click the light bulb next to **Analysis** to turn off all analysis views. You should now see a cylinder body protruding from both sides of the knife body.	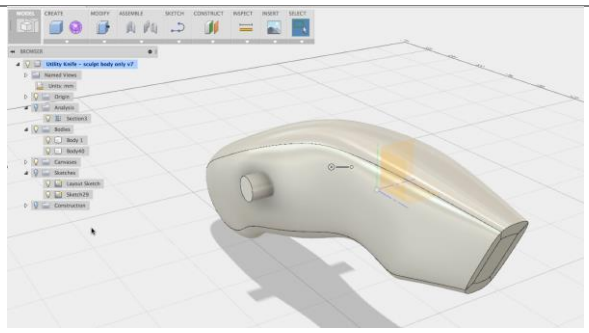
Step 9 – Start the hole command We're now going to create a counter-bore hole through the cylinder. 1. Click **Create > Hole**.	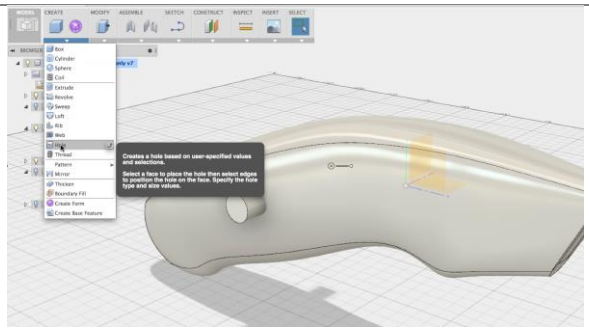
Step 10 – Position the view to select the center 1. Rotate around the model so you see the left side of the knife. 2. Hover over the surface of the cylinder body until you see a center point appear.	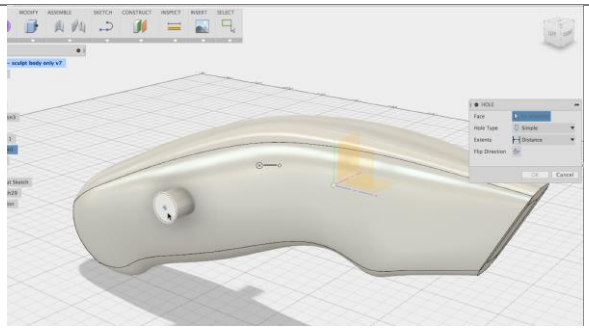
Step 11 – Select the center and set the type 1. Click on the surface with the center-point visible. This will snap the hole to the center-point. 2. In the dialog box, change the Hole Type to **Counterbore**.	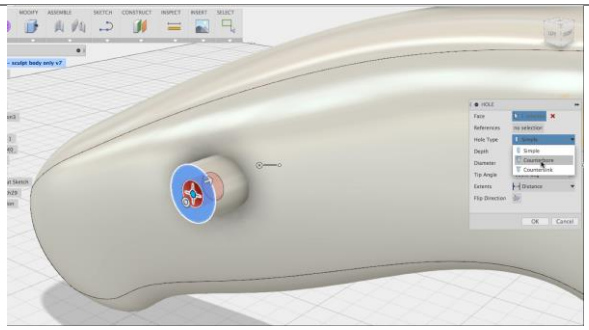

Step 12 – Set the hole depth 1. Drag the arrow that determines the depth of the hole to **28 mm**.	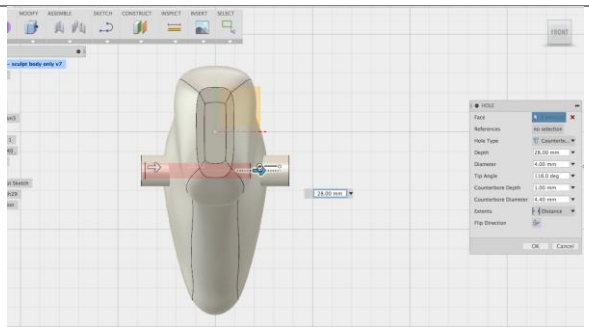
Step 13 – Set the diameter 1. In the dialog box, set the diameter of the hole to **3 mm**.	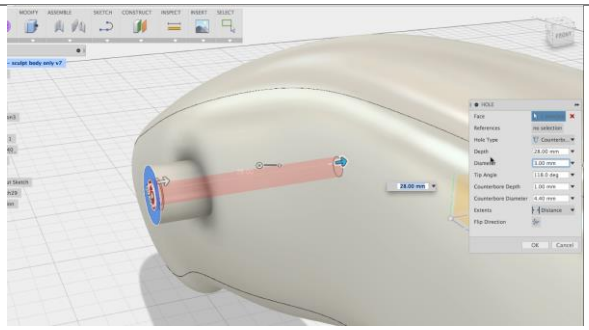
Step 14 – Set the counterbore depth 1. Now drag the arrow that determines the depth of the counterbore to **15 mm**.	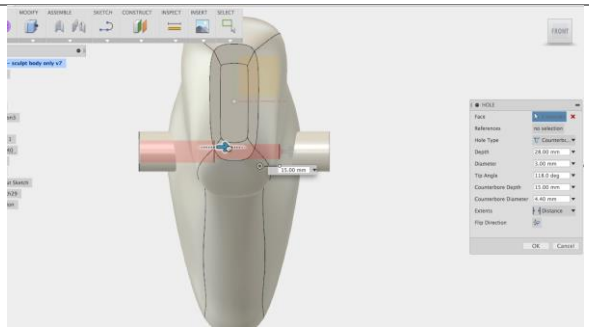
Step 15 – Set the counterbore diameter 1. In the dialog box, change the counterbore diameter to **6 mm**. 2. Click **OK** to finish.	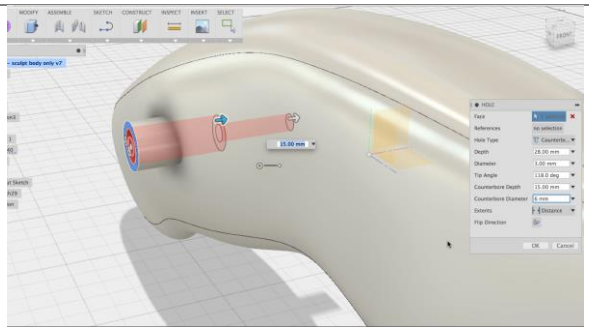

Step 16 – Start the Split Body command We're now ready to split the body into 2 halves. 1. Click **Modify > Split Body**.	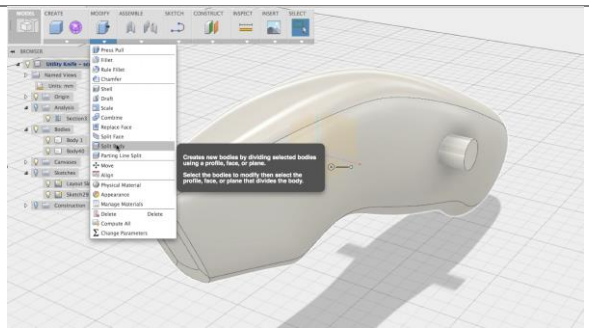
Step 17 – Select the body and split plane 1. Click on the knife body as the Body to Split. 2. Hover over the middle plane, click and hold the click until a selection dialog is displayed. 3. Choose the first Work Plane as the Splitting Tool.	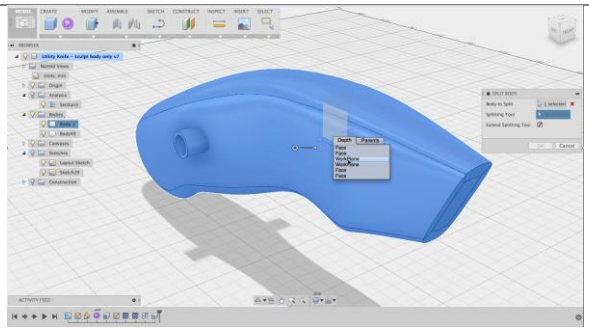
Step 18 – Finish the command You should see this as a result. 1. Click **OK** to finish.	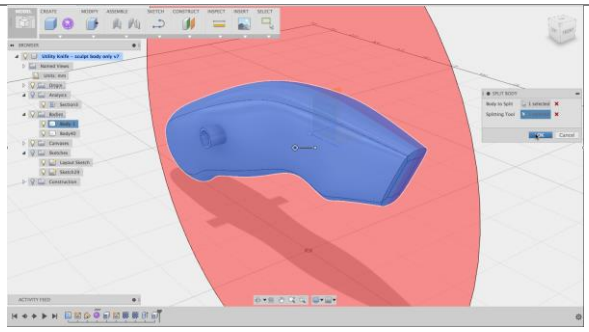
Step 19 – Start the Split Body command Now that we split the knife body into two pieces, let's split the cylinder body as well. 1. Right click and select **Repeat Split Body**.	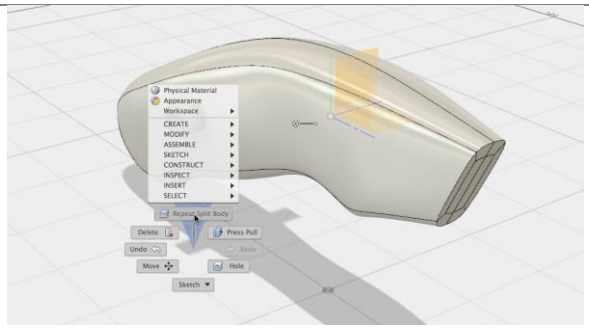

Step 20 – Select the body and split plane 1. Click on the cylinder body as the Body to Split. 2. Select the middle origin plane as the Splitting Tool. 3. Click **OK** to finish.	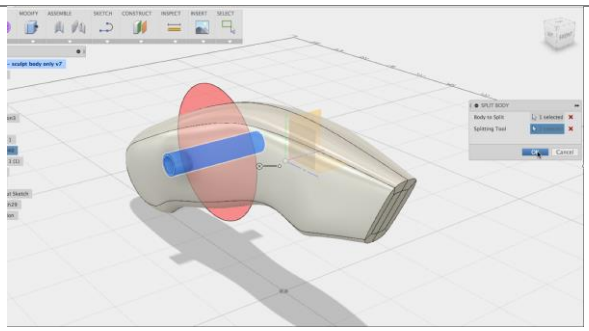

Combine bodies: Now you combine bodies. The end result is two bodies.

Step 1 – Hide one side of the design After the split body commands, you'll see that you have 4 bodies in your Bodies folder in the browser. We'll want to combine the left cylinder with the left knife body, and the right cylinder with the right knife body so that we are left with two bodies total. 1. In the browser, use the light bulbs to hide the right side bodies so only the left side is visible.	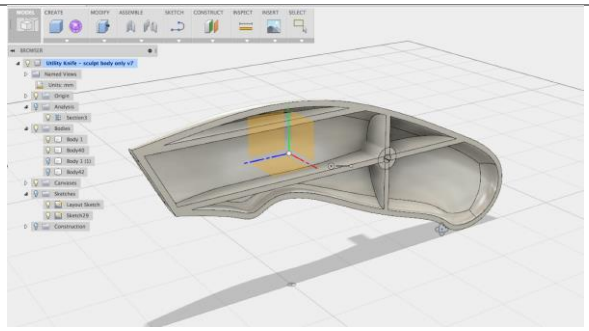
Step 2 – Start the Combine command 1. Click **Modify > Combine**. We're going to use this command to join the knife body with the cylinder body where we have our counter-bore hole.	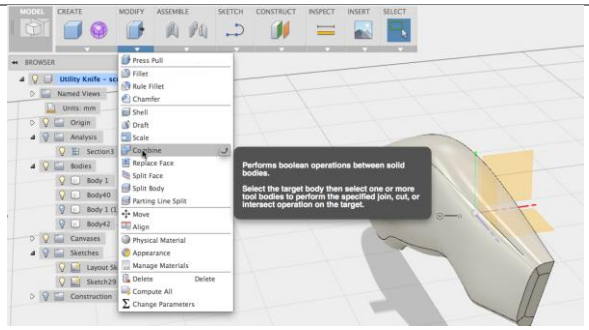
Step 3 – Select the body to keep 1. First, select the utility knife body as the Target Body.	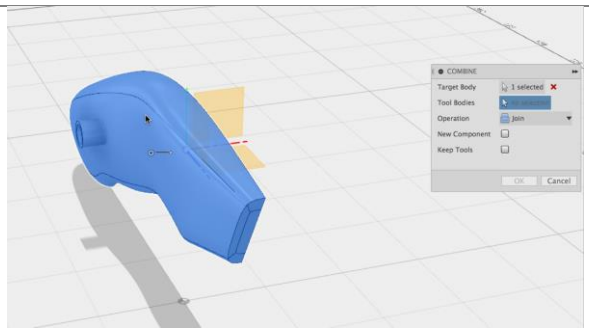

Step 4 – Select the tool body 1. Select the cylinder body as the Tool Body for the target body to combine with. 2. Leave the Operation as **Join**. 3. Click **OK** to finish.	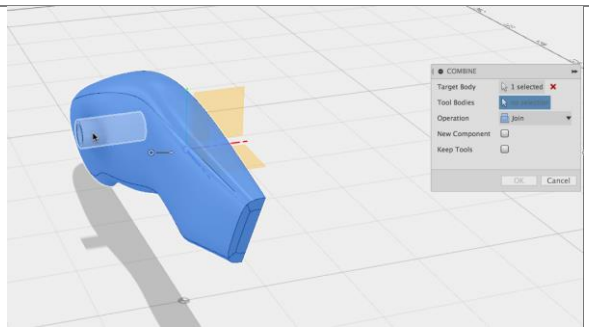
Step 5 – Repeat for the right side 1. In the browser, use the light bulbs to hide the left side and make the right side bodies visible. 2. Right-click and select **Repeat Combine** to reuse the last used command.	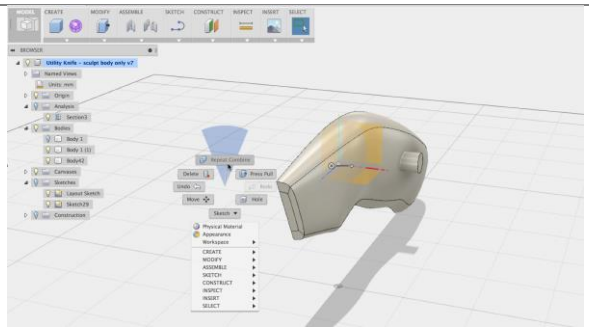
Step 6 – Set the Combine options We're going to repeat the last combine steps, but now for the right side bodies. 1. Select the knife handle as the Target Body. 2. Select the cylinder as the Tool Body. 3. Leave the Operation as **Join.** 4. Click **OK** to finish.	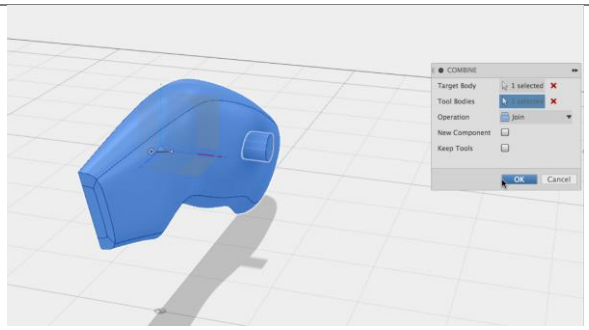
Step 7 – Delete bodies Let's get rid of the two protruding cylinders. 1. Hold **Shift** and then select the two cylinder bodies. 2. Press **Delete** or **Backspace** on your keyboard and the two bodies should just go away.	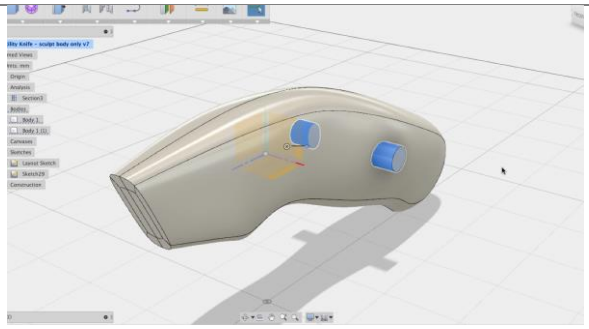

Step 8 – Finished webs and holes Now you can see that the utility knife has a counter-bored hole that extends across the split bodies, just the way it would be manufactured.	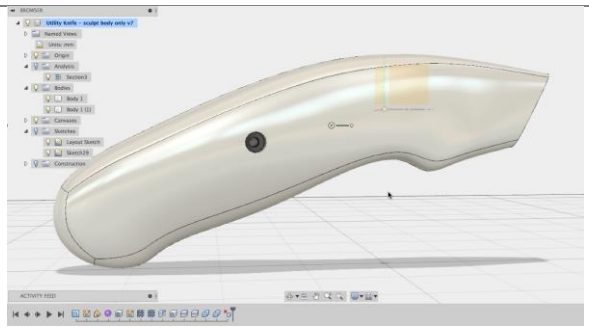

Modify shape: Finally, you edit the sculpted body to see how this affects downstream operations.

Step 1 – Edit sculpted form Let's make a change! 1. Locate the sculpt operation in the timeline at the bottom of the canvas. 2. Right-click and select **Edit**. This allows you to get back into the sculpt environment and make change to the knife body itself.	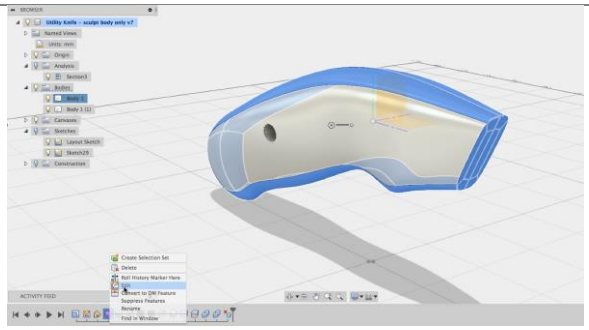
Step 2 – Select the faces to modify 1. Select **LEFT** view on the ViewCube. 2. Click on the bottom face. 3. Right-click and select **Edit Form**.	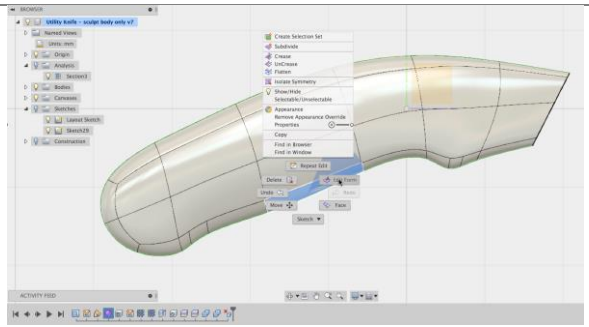
Step 3 – Move the face 1. Use the vertical arrow manipulator and drag the surface down to **– 5 mm**.	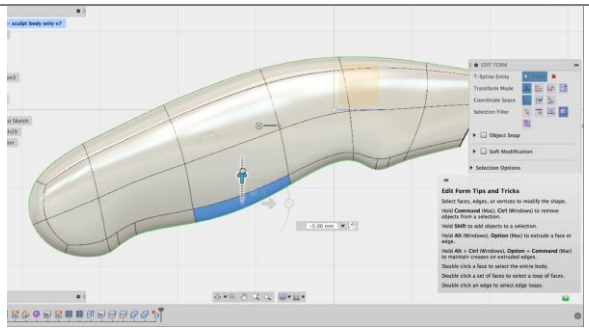

Step 4 – Move an edge 1. Select the lower edge of the finger guard. 2. Use the arrow manipulator and drag that edge down **– 5 mm**. 3. Click **OK** to confirm.	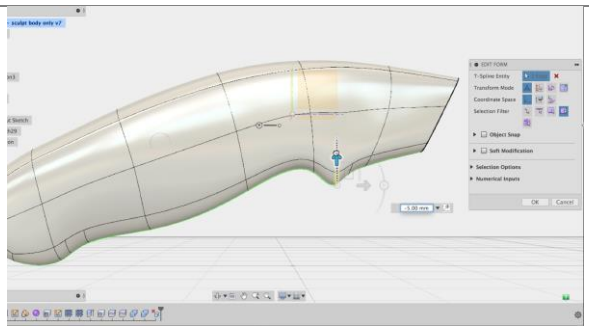
Step 5 – Finish form 1. Click **FINISH FORM** to finish the changes. 2. Once clicked, the model updates automatically with all your downstream features still intact.	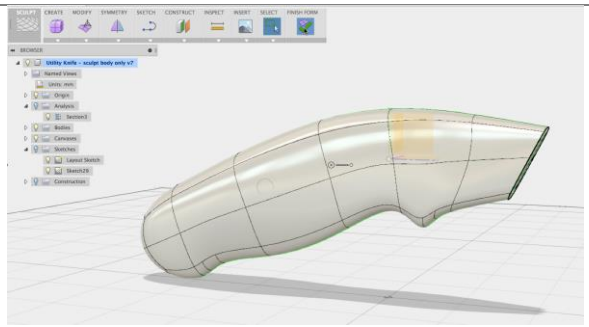
Step 6 – View the inside of the design 1. Hide one of the bodies and notice that the webs and hole updated along with the change you made to the sculpted body.	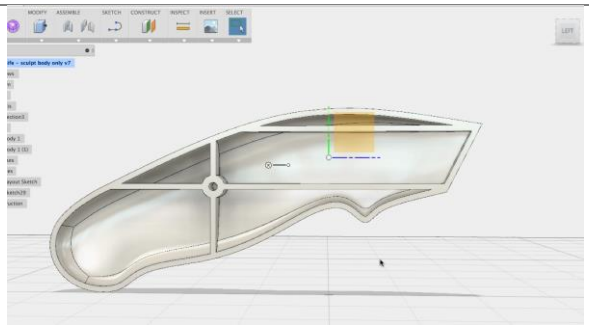
And we're done! Now that you know how the timeline works, you can select any of the commands used and make appropriate changes, such as web thickness, hole depth and diameter, shell thickness, as well as sketch dimensions.