Overview

In this module you will learn how different components can be put together to create an assembly. We will use several tools in Fusion 360 to make sure that these assemblies are constrained appropriately and that they function like they are supposed to. Motion of different parts with respect to each other will also be explained.

Learning Objectives

In this section, you will learn how to:

- Convert bodies to components and work with components
- Move and align components
- Create Joints and As Built Joints
- Drive joints and create contact sets
- Create Motion Links
- Create Motion Studies

Top-down Design Methodology

Fusion uses a top-down design approach, which is essentially the breaking down of a system to gain insight into its compositional sub-systems. In a top-down approach an overview of the assembly is formulated, specifying but not detailing any base level parts. Each subassembly and part is then refined in yet greater detail, sometimes in many additional levels, until the entire specification is reduced to base elements.

In top-down assembly design, one or more features of a part are defined by something in an assembly, such as a layout sketch or the geometry of another part. The design intent (sizes of features, placement of components in the assembly, proximity to other parts, etc.) comes from the top (the assembly) and moves down (into the parts), hence the phrase "top-down".

Bodies and Components

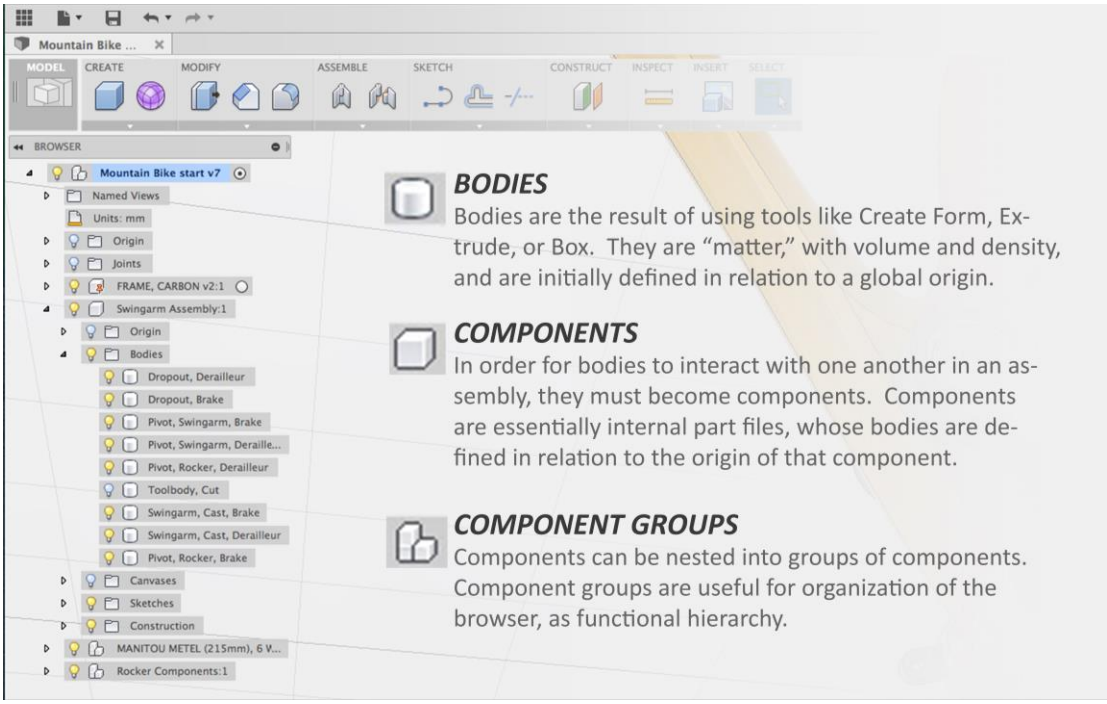

If you're more familiar with a CAD system that references external parts in an assembly, the first thing to know is that Fusion's equivalent to a "part file" is a "component," and all components exist in the same working Fusion file – there are no external references. Component groups act like sub-assemblies, and bodies are physical objects that exist either in the global space, or in a component. There can be multiple copies or instances of one component, and in that case, modifying one will modify all other instances similarly.

Open Fusion 360 design file: In this section you will open the first design file.

Step 1 – Open the Data Panel 1. Open the Data Panel by clicking on the icon located at the top left of the menu bar. 2. The Data Panel will slide open.	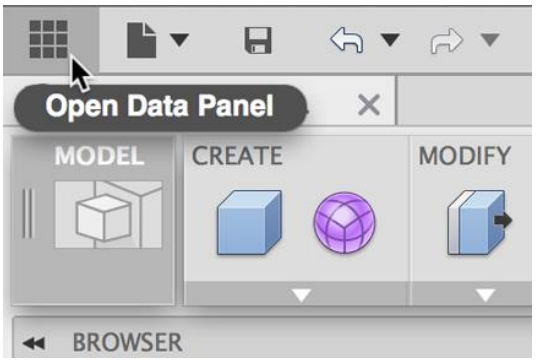

Step 2 – Open the design *In this module we will be using the* **06_Working with Components.f3d** *file to complete the exercise. If you haven't set up a new project and uploaded the necessary designs, please follow the steps in the Introduction module.* 1. At the top left of the Data Panel, select the project where you uploaded the **06_Working with Components.f3d** file. 2. Navigate to this design and either **double-click** or **right-click** and select **open.** 3. When the design has opened in your modeling window, click on the icon to close the Data Panel.	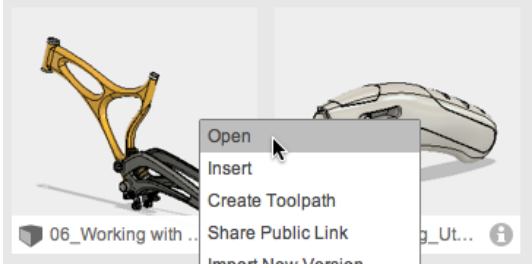

Working with Components: In this exercise, we'll be exploring the different tools used work with components and component groups.

Step 1 – Creating components 1. Right-click on the top node in the browser. 2. Select "**New Component**." 3. Click on the name of the new component in the browser. 4. Click on the name again to edit. Enter "**Carbon Main**."	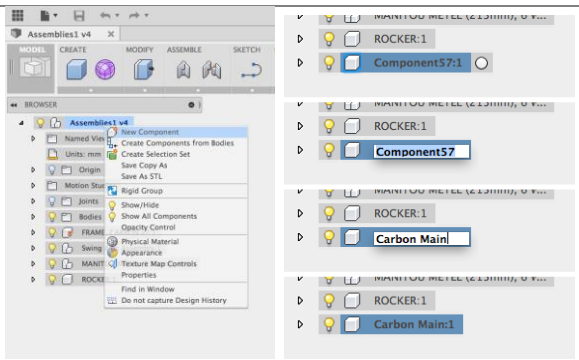 Launch Video

Step 2 – Converting to Components

1. Expand the main “Bodies” folder in the browser.
2. Drag the body “**Carbon Layup**” to the new “**Carbon Main**” component.

The Body “Carbon Layup” is now defined in relation to the component origin, not the global origin. This is now effectively a “part” in an “assembly.”

Alternatively, right-click on the body in the tree and choose “Create Components from Bodies” creates a new component that includes that body.

To pull any body or other object out of a component, drag it to its desired destination, or the top node in the browser.

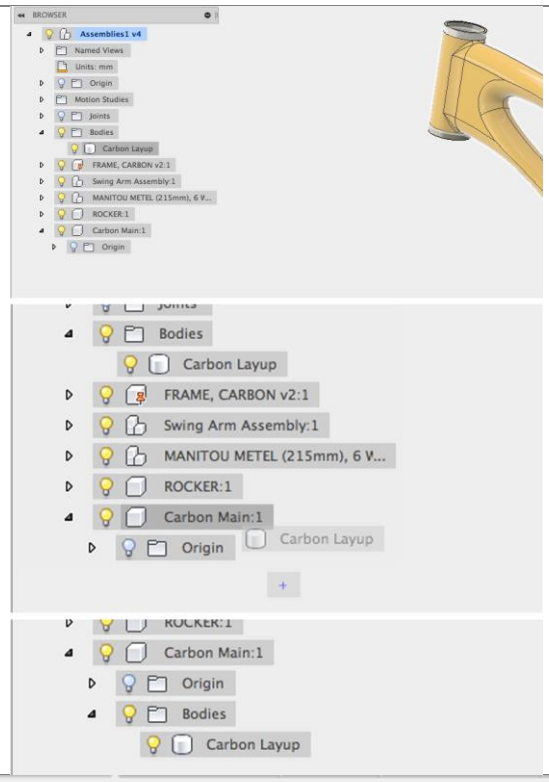

Step 3 – Component Groups

1. We want to move this component into a component group.
2. Click on and drag the new “**Carbon Main**” component, and release it over the “**Frame, Carbon**” Component Group.
3. We’ve now moved it into a component group.

By moving it into a component group, we’ve defined its origin in relation to the subgroup’s origin, which is in turn defined by the global origin.

By moving any component A to any component B, component B will become a component group that contains its original content, as well as component A.

If a component group is moved into another component group, it creates a nested component group, accordingly.

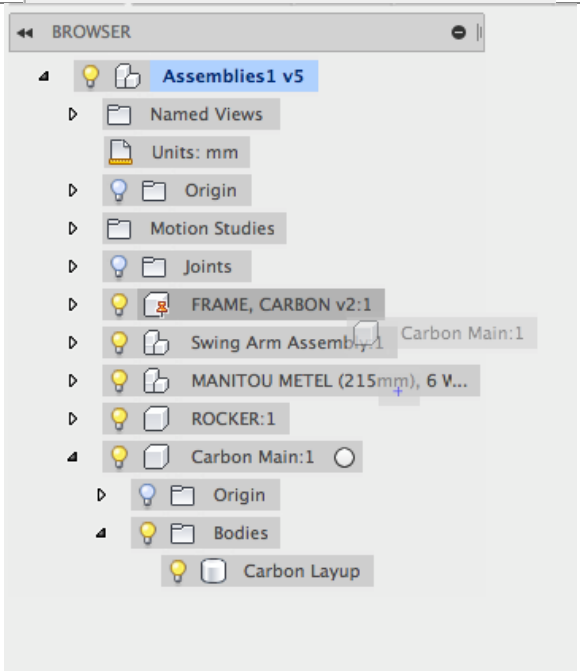

Launch Video

Step 4 – Instances/Referencing

1. Expand the component group "**Swingarm Assembly**" in the browser.
2. In the group, expand the nested component group "**Bearing Assembly – Swingarm to Frame**"
3. Rename the first component that's listed. Change "SS 6003 2RS (10 X 17 X 35mm)" to "**Bearing**."

Note that the change also changed another component listed in the "Bearing Assembly – Swingarm to Frame" group. This is because the component that is now "Bearing: 2" is actually just another instance of the bearing component. Making any change (renaming, materials, or any modeling change) to one will make the same change to any other instance of that component. Instances are denoted with a :x, x being the 2nd, 3rd, 4th, etc. instance of that component.

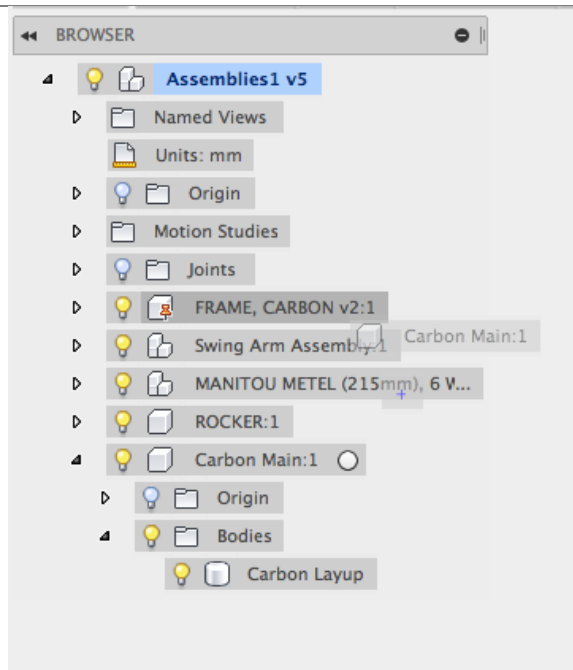

Step 4 – Component Color Cycling

1. Click the "**Home**" button on the ViewCube.
2. Click **Inspect > Component Color Cycling.**
3. Expand the group "**Swingarm Assembly**" in the browser.
4. Right-click on "**Bearing Assembly – Swingarm to Frame**" and select **Isolate**.
5. Notice that even though the two identical instances of the "Bearing" component are shown, they are different colors to distinguish them.
6. Click **Inspect > Component Color Cycling** to turn off component color cycling.

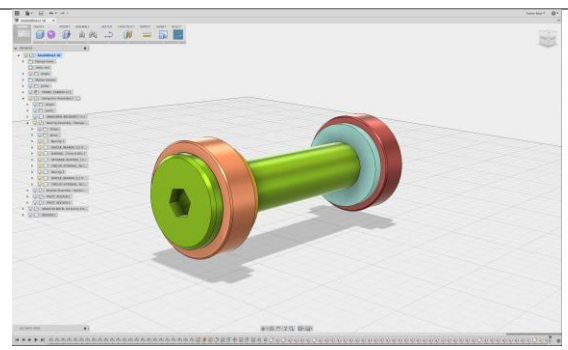

Launch Video

Move and Align: In this exercise, we move and align components in space. Moving and aligning position components, but do not lock them into their new location. Joints (in an upcoming exercise) move and align components, but also restrict their movement based on that definition. Moving and aligning simply shifts position in the global space.

Step 1 – Move

1. Display the Data Panel.
2. Open "**06_Moving and Aligning"**.
3. Hover over the workspace switcher and select **Model**.
4. Click the **Home** icon on the ViewCube.
5. Expand the group "**Swingarm Assembly**".
6. Right-click on "**Bearing Assembly – Swingarm to Frame**" and select **Isolate**.
7. Right-click on "**Bushing 17mm X 85L**" in the browser then select **Move**.
8. Type **– 20 mm** as the Z Distance in the dialog box.
9. Click **OK**.

We've moved a component, and not just a body. Therefore, its origin has moved with it, and has been redefined by the global origin.

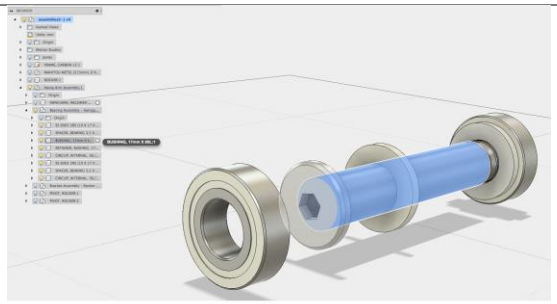

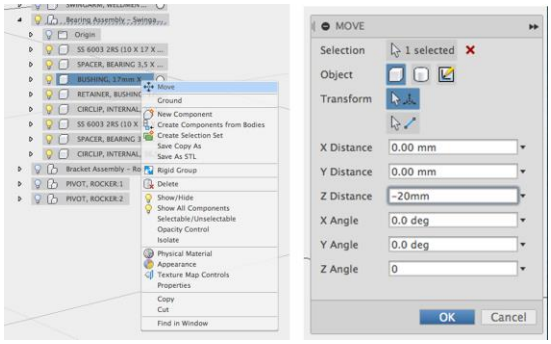

Launch Video

Step 2 – Align Component

1. Select the front side face of the bearing shown at right.
2. Hold **Shift** and select the inside back side face of the bushing head.
3. Click **Modify > Align**.
4. In the dialog box, make sure "**Align Components**" is selected for the Object selector.
5. Click **OK**.

When aligning, the geometry that is clicked first will move to the geometry that is clicked second.

Here, we've aligned two full components, not just bodies.

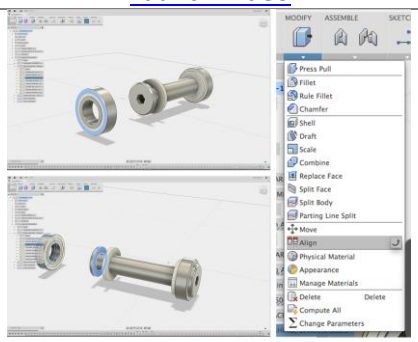

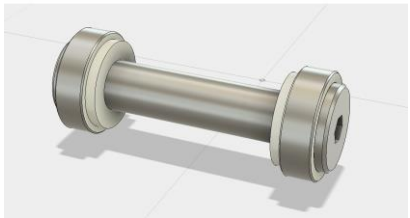

Create a Rigid Group: We create Rigid Groups in Fusion when we need to constrain multiple bodies to each other that have no capability of movement relative to themselves. So instead of creating multiple Rigid joints, it's easy to use the Rigid Group command and constrain multiple objects at once. The Rigid Group function locks the relative position of the selected components. The components are then treated as a single object when moved or when joints are applied.

Step 1 – Open a design 1. Display the Data Panel. 2. Open the **06_Rigid Groups** design. 3. Notice that the visibility of all other components except the Frame is turned off.	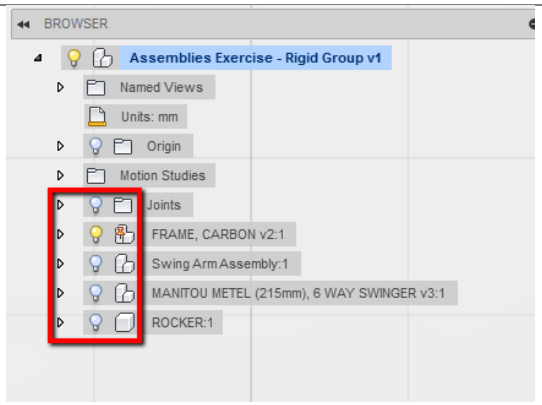 Launch Video
Step 2 – Expand a component group 1. Expand the **Frame, Carbon** component group. 2. Notice that there are multiple components within it. We need these components to function as a single object and so we will use the Rigid Group function to constrain them.	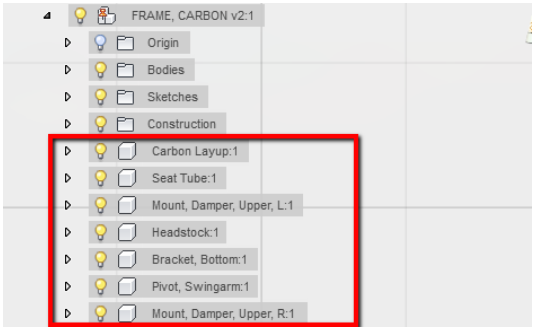
Step 3 – Start the Rigid Group command 1. Hover over **Frame, Carbon** then click the dot next to the name to activate the component. We do this because we want the Joint to associate with this component group rather than the top level assembly. 2. Click **Assemble > Rigid Group**.	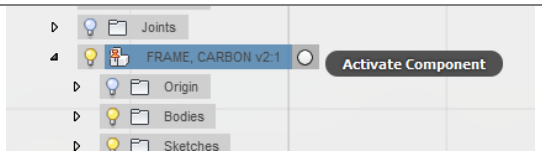 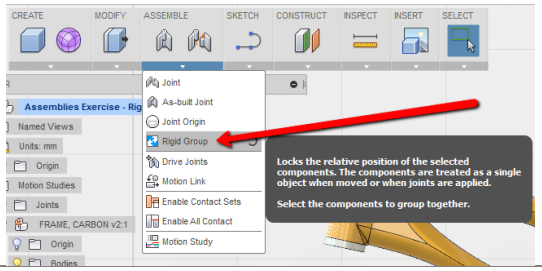

Step 4 – Select objects

1. Select **Carbon Layout**, hold **Shift** then select **Mount, Damper, Upper, R**. This selects all components between those two.
2. Click **OK** and all these components will now function as one single object.
3. The Rigid Group is listed in the browser under the Joints node.

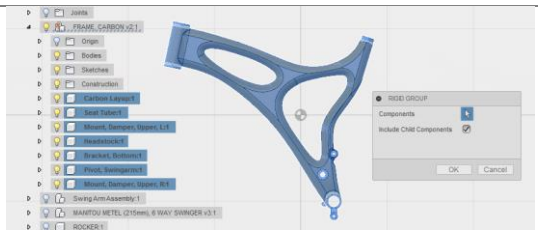

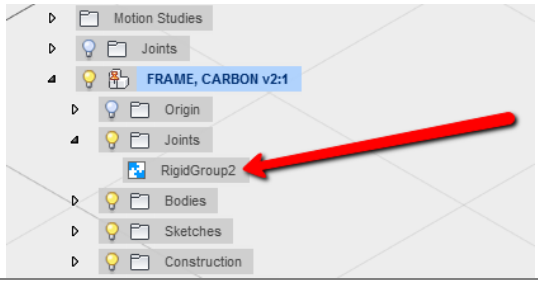

Joints: In this exercise, we'll use the joints tool to align a component to others in an assembly. These joints will also define the degrees of freedom by which these parts can move. Joints are enacted between components, but are defined by certain features within the component, like a body face or edge. They ultimate define how components can move and animate, and they drive motion studies.

Launch Video for this exercise.

Step 1 – Add Planar Joint

1. Display the Data Panel.
2. Open the **06_Joints** design.
3. Hover over the workspace switcher and select **Model**.
4. Select **Assemble > Joint**.
5. For Component 1, select the front face of the rocker and snap to a point near the hole in the center.
6. Rotate the model to view the back of the rocker pivot (shown). Select the back face of the rocker pivot and snap to the point in the center of the face.
7. You'll see Component 1 move to Component 2, with an animation of the degrees of freedom of the joint.
8. Under Motion Type, select "**Planar**." The animation shows the two selected planes exiting on the same plane, with the freedom to move along that plane.
9. Enter an offset of **0.65 mm** to a space between the two components. (Click the

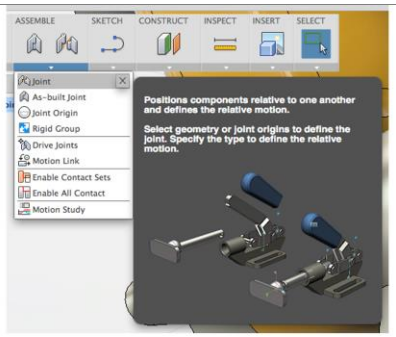

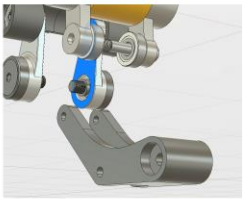

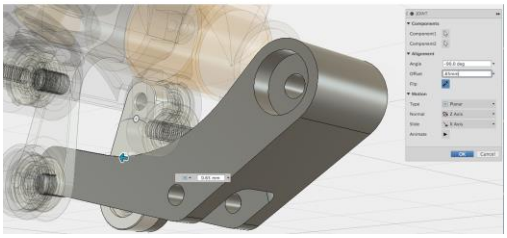

Left View of the ViewCube to see this gap) 10. Click **OK**. The animations you see are assuming no other joints in the assembly. The animations ONLY show the added constraints of the joint.	
Step 2 – Ground a component 1. Hold **Alt** then drag the rocker component to move it around in space a bit. 2. Notice that everything in the assembly moves with it. Something in the assembly needs to be grounded – fixed in space. 3. Click **Undo** to put the components back in the original positions. 4. Right-click the component "**Frame, Carbon**" and select "**Ground**." You'll see a pin appear on the icon in the browser. 5. With the frame now fixed in space, hold **Alt** and drag the rocker to move it around a little. You will see the planar joint in action.	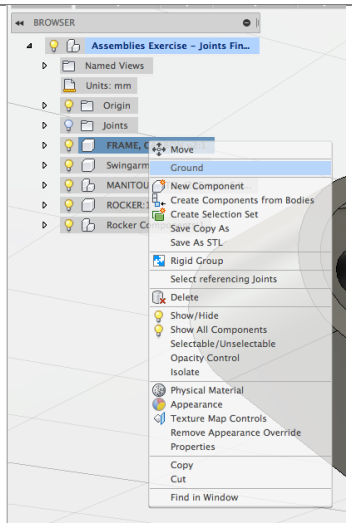 Launch Video
Step 3 – Add first of three cylindrical joints You might need to move the rocker around or rotate the model to select some geometry. 1. Select **Assemble > Joint**. 2. Set the **Motion Type** to **Cylindrical**. 3. For Component 1, select the midpoint of the rocker face shown. 4. For Component 2, select the midpoint of the bolt face shown. 5. Click **OK**.	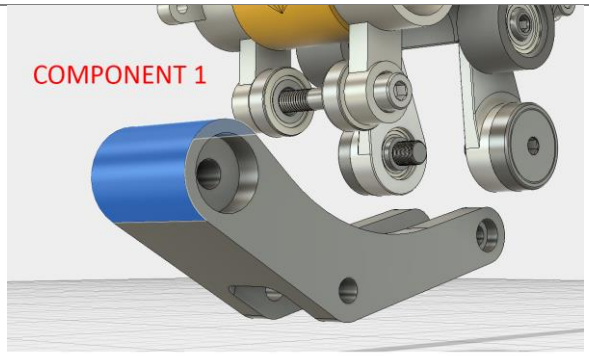 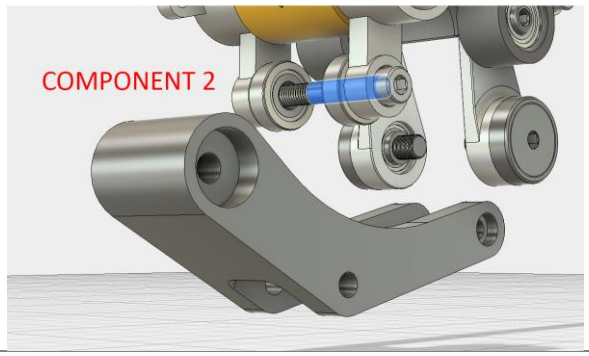

Step 4 – Add the next joint 1. Right-click and select **Repeat Joint**. 2. Make sure the Motion Type is set to **Cylindrical**. 3. For Component 1, choose the rocker face shown. 4. For Component 2, choose the pivot's edge shown. Be sure to select the edge and not the face. 5. Click **OK**.	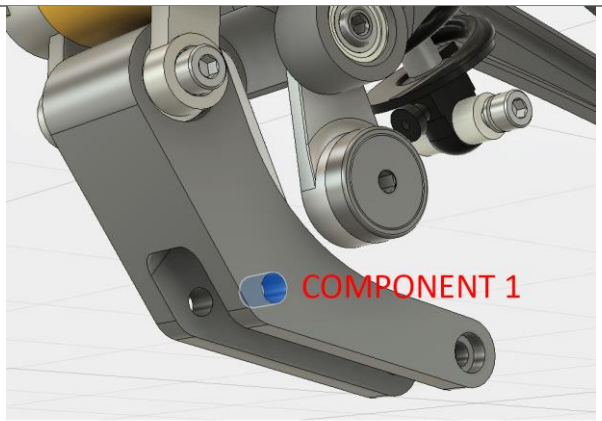 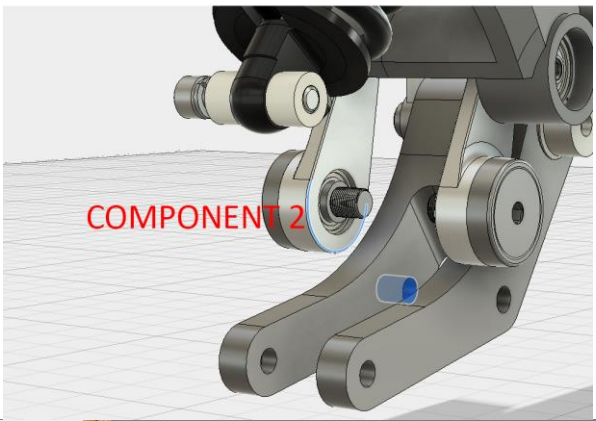
Step 5 – Add a cylindrical joint 1. Right-click and select **Repeat Joint**. 2. Make sure the Motion Type is set to **Cylindrical**. 3. For component 1, choose the rocker face shown. 4. For component 2, choose the bolt face shown. 5. Click **OK**.	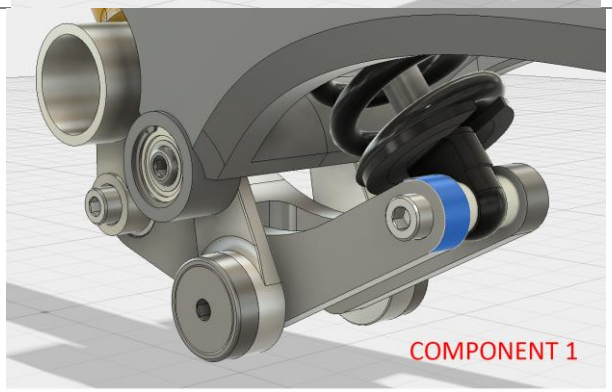 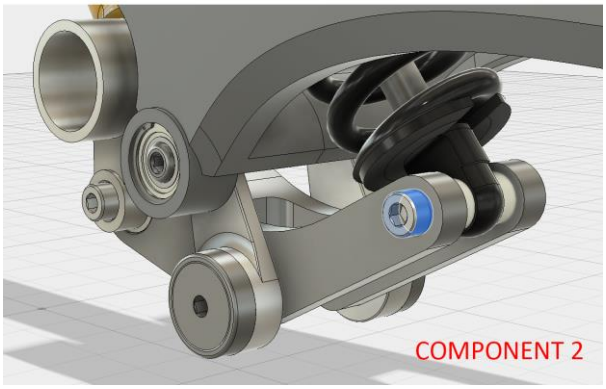 Launch Video

Step 6 – Visualize joints

1. Hold **Alt** and drag the swingarm. Notice the joints are honored as the parts move throughout space.
2. You'll also find folders in the browser that contain joints in the global space, as well as within component groups. The light bulbs next to the folders and individual joints will show/hide the joint icons in the model, but will not suppress the joints.
3. Right-click on a joint to suppress it, edit it, definite its limits, animate it, or lock it.

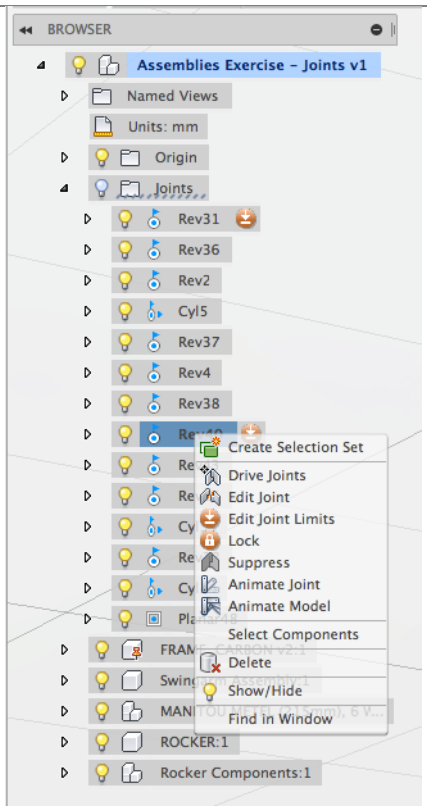

Launch Video

As-built Joints: An as-built joint is used in the case of imported geometry or top-down design when the components to be constrained are in the correct positions relative to each other, i.e. they don't need to be moved. An as-built joint maintains the position, and defines the relative motion.

Step 1 – Open the design and set visibility 1. Open **06_As Built Joints**. 2. Use the light bulbs to turn off the visibility of the **Frame, Carbon** and the **Swing Arm Assembly** so that you only see the Damper	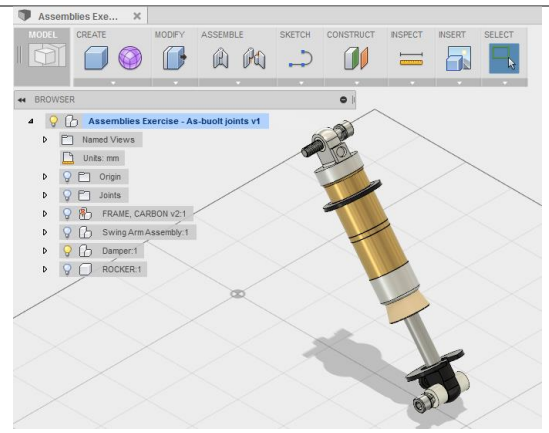 Launch Video
Step 2 – Component structure 1. Expand the **Damper** component group and you will see that it is made of several different components and components groups itself. 2. We are going to constrain these components in order to define how the damper will function.	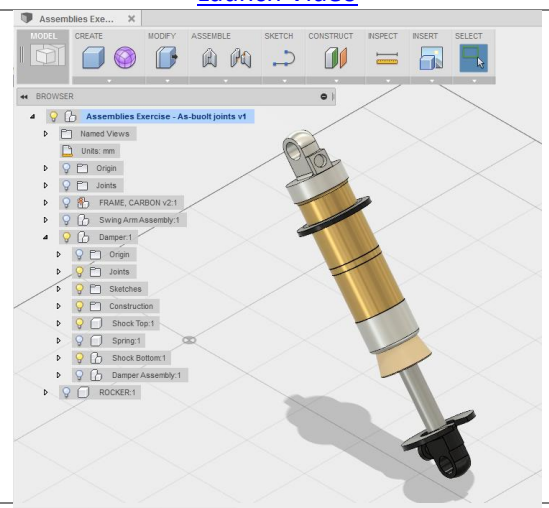
Step 3 – Set your selection 1. Make sure your selection filters are set to select only **Bodies**, **Components**, **Joint Origins** and **Joints**. This will make it easier to select the right components to constrain. 2. Hover over **Damper** in the browser then click the dot next to the name to activate the component. Once it is activated, the text should appear **Bold**.	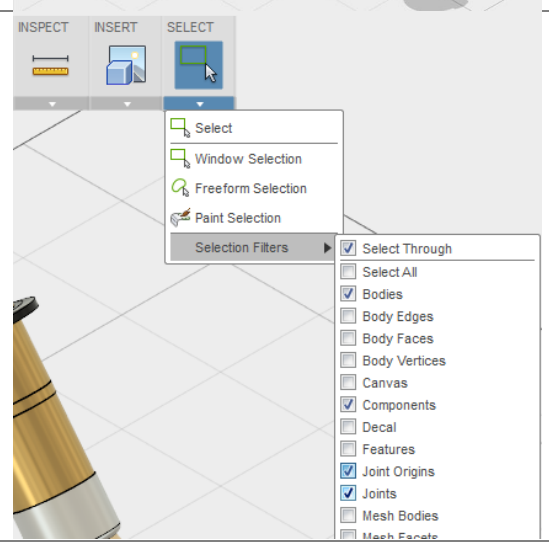

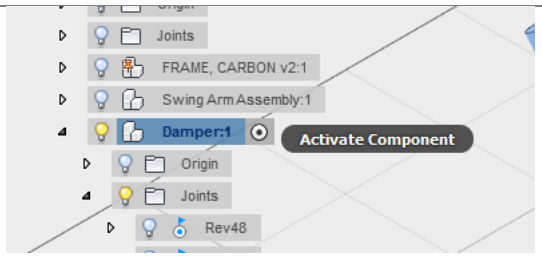

Launch Video

Step 4 – Create a rigid joint

The first joint we want to create is a Rigid joint between the Shock Retainer and the Shaft.

1. Click **Assemble > As-built Joint**.
2. Select the **Shaft** and the **Shock Retainer** as the two components (you can do this in the window or the browser under the Shock Bottom component group). Make sure that the Type of joint is Rigid, and you will see an animation that depicts the Rigid joint
3. Click **OK**.

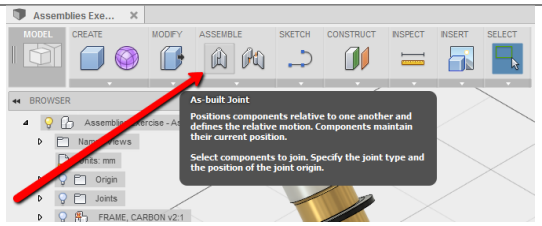

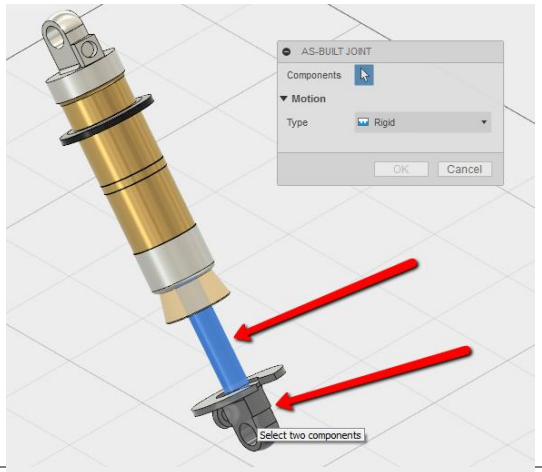

Step 5 – Create a cylindrical joint

The next joint we will create is a cylindrical as-built joint between the Shock Top and the Shaft.

1. Click **Assemble > As-Built Joint**.
2. Set the Type to **Cylindrical**.
3. Select the **Shaft** and the **Shock Top** (in that order) as the two components.
4. Select the profile of the shaft where they both meet as the Position reference.
5. You will see an animation of how this join will function. If this looks right, click **OK**.

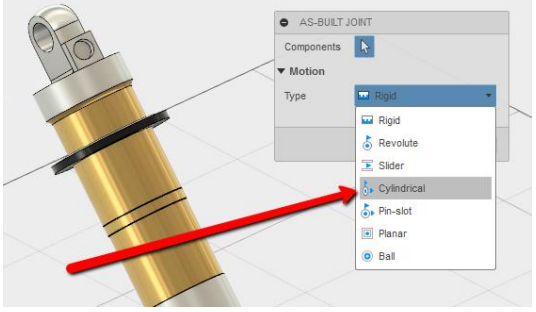

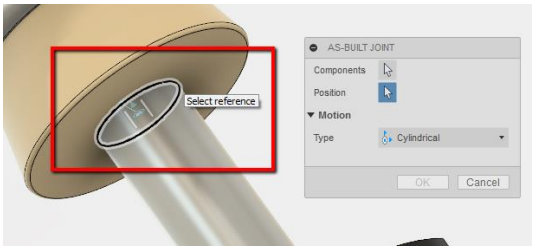

Step 6 – Joint limits

The next thing we want to do is define limits for this cylindrical joint.

1. Hover over the joint you just created and click the **Edit Joint Limits** icon. You will need to adjust these limits until you get to the appropriate limits which best define the motion of the damper.
2. Set the Motion to **Slide**.
3. Check the boxes for **Minimum** and **Maximum** limits.
4. Enter a Maximum limit of **30 mm** and you will see the Shaft move in to represent that limit. If this looks right, click **OK.**

   If the shaft moved in the opposite direct (away from the Stock Top), change the minimum limit to -30 mm and the maximum limit to 0 mm.

You will now be able to click and drag the Shock Retainer (under Shock Bottom) and will be able to see the motion of the damper based on the joints you just set up.

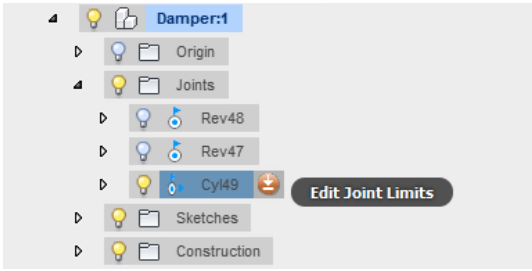

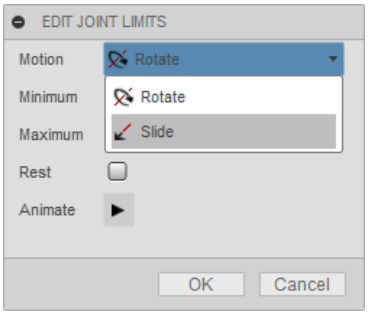

Launch Video

Contact Sets: Contact sets designate which components do not interfere once they contact each other. A contact set can be used to define the limits of motion allowed because the motion stops when the components come into contact.

Step 1 – Continue with 06_As built joints

1. Continue working with the **06_As built joints** design.
2. Make sure the visibility of the **Frame, Carbon** and the **Swing Arm Assembly** is turned off so that you only see the Damper.
3. Make sure Damper is activated.

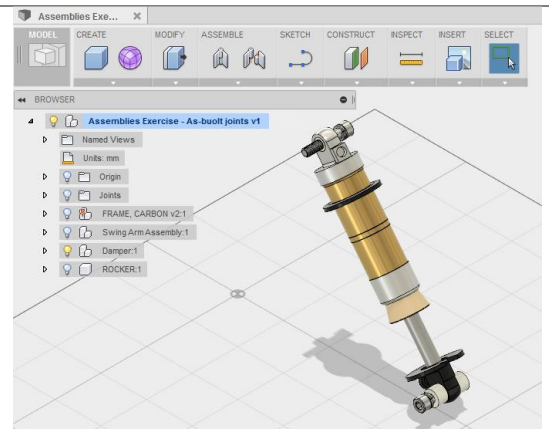

Launch Video

Step 2 – Remove max joint limit

1. Hover over the cylindrical joint in the joints folder and click the **Edit Joints Limits** icon.
2. Set the Motion to **Slide**
3. Uncheck the **Maximum** check box. Leave the minimum limit as 0.00 mm.
4. Click **OK**.
5. Now when you drag the Shock Retainer upwards, you will see that it interferes with the Shock Top since there is no maximum limit of motion. We need to set up a contact set, so that when the Shock Retainer contacts the Shock Top, it knows that it cannot go any further.
6. **Undo** any movement you might have done.

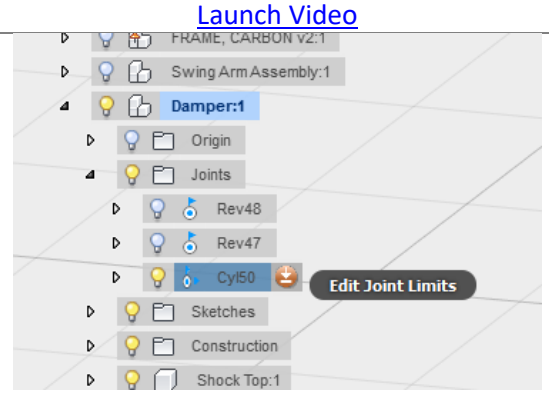

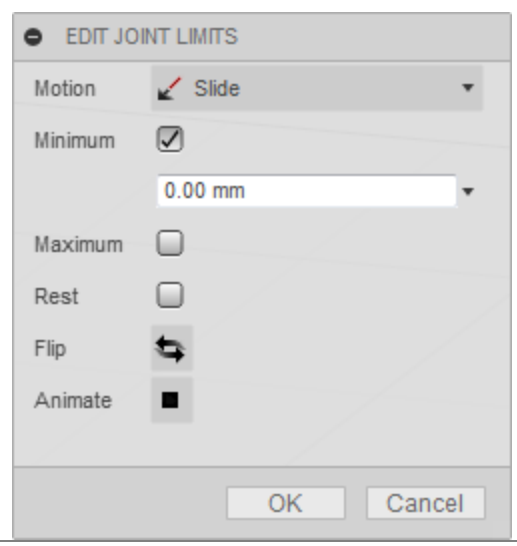

Step 3 – Set up contact

1. Click **Assemble > Enable Contact Sets**.
2. Click **Assemble > New Contact Set**. The New Contact Set dialog box displays.
3. Select the **Shock Retainer** and the **Shock Top** as the two bodies. Click **OK**.
4. Drag the Shock Retainer towards the Shock Top and you will see that it stops as soon as it comes in contact with the Shock Top.
5. **Undo** any dragging to return the components to their original position.

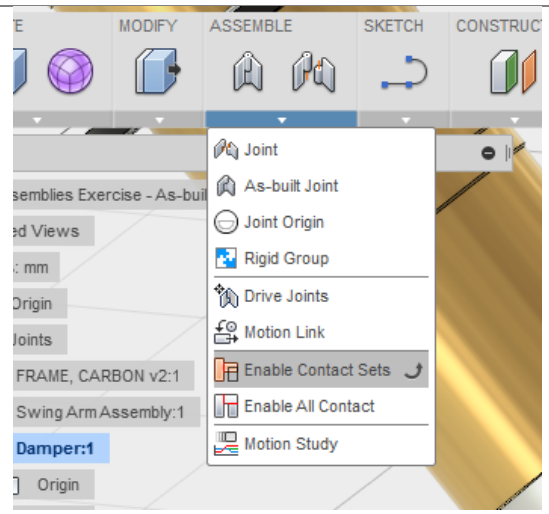

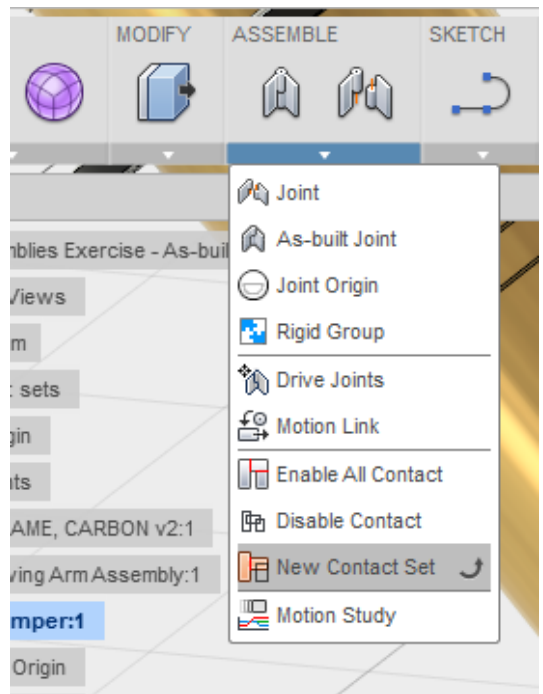

Step 4 – Edit the contact set

1. To Edit or Suppress the contact set at any point, right-click on the contact set in the Browser and click **Edit** or **Suppress**.

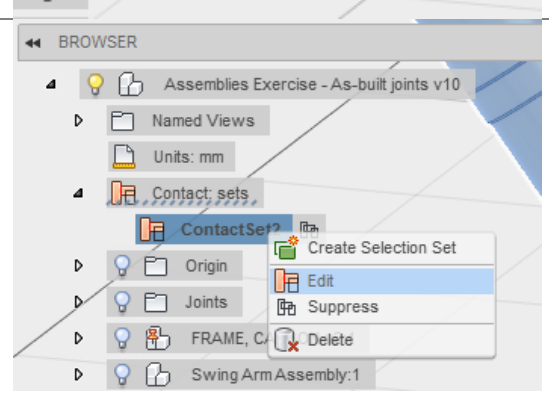

Launch Video

Motion Study: A motion study in Fusion 360 allows the user to animate the motion of the design based on the joints and limits placed.

Step 1 – Open the design 1. Open **06_Motion Study.** 2. Use the ViewCube to view the **Front** view.	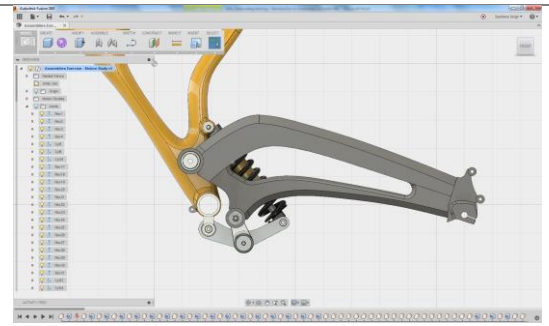 Launch Video
Step 2 – Start a motion study 1. Click **Assemble > Motion Study**. The Motion Study dialog box displays. 2. The first thing you need to do is select a joint to animate. Expand the Joints folder, and pick **Rev31** as the joint to animate. The joint is added to the list of joints in the Motion Study dialogues box. In the Motion study dialog box, you create a chart of the motion to be animated. The X Axis on this chart denotes steps or time. The Y Axis denotes the extents of the motion. In the case of a revolute joint the Y Axis denotes degrees, but in the case of a slider joint, it denotes distance in in/mm.	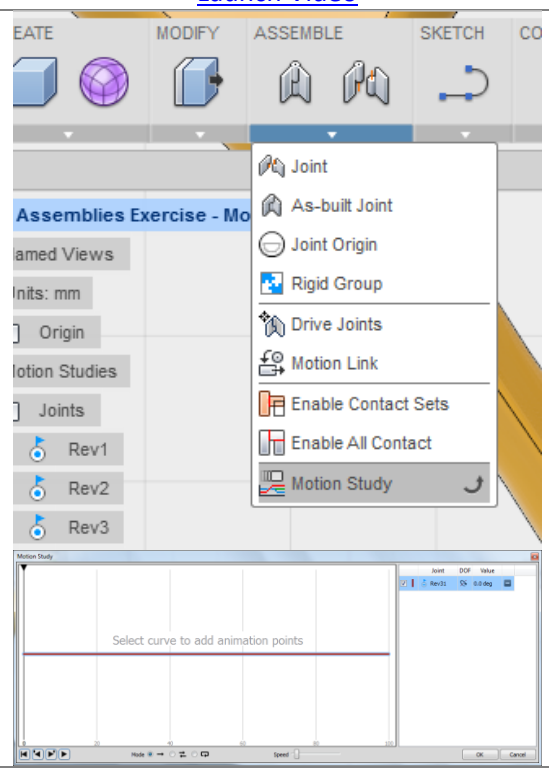

Step 3 – Set up motion

1. Click on the line to add a point.
2. Enter these values:
   Angle: **5**
   Step: **10**
3. Click another point on the line.
4. Enter in the following values.
   Angle: **10**
   Step: **15**
5. Continue putting in the following values for the next 5 points
   Angle: **2** Step: **25**
   Angle: **7** Step: **30**
   Angle: **12** Step: **40**
   Angle: **- 3** Step: **45**
   Angle: **- 7** Step: **50**

The goal of putting in these random numbers is to simulate the motion of the bike as it goes over different terrain.

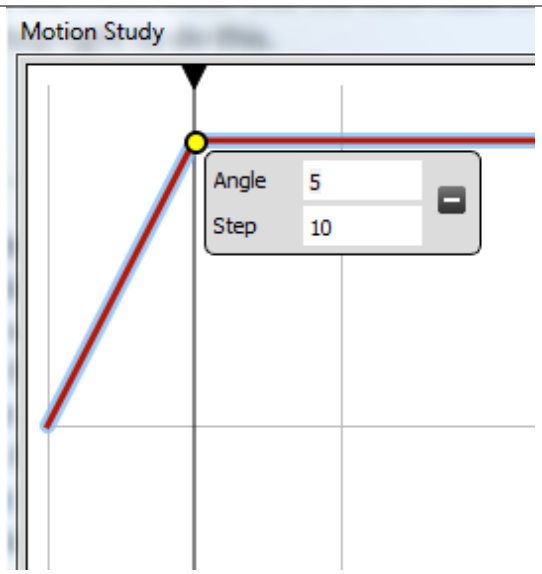

Step 4 – Play the motion

1. Your chart will look like the one on the right.
2. Change the Mode to **Loop**
3. Click the **Restart** button to bring the counter back to Zero.
4. Click **Play**.

You will see the complete assembly reacting to the motion that you just built in. All the joints in the assembly are working to drive this motion. A motion study is a way for the user to verify the function of their designs.

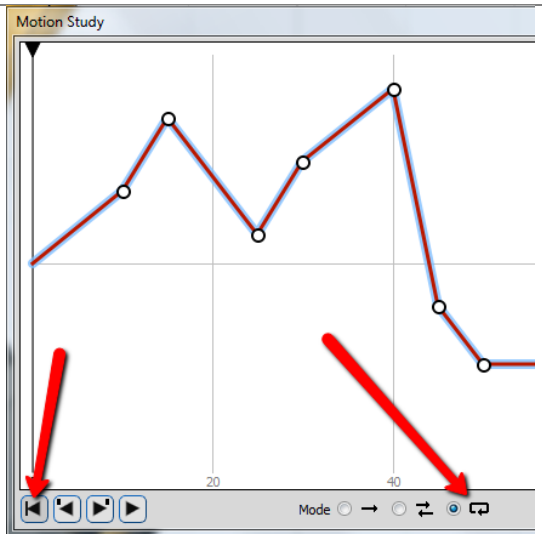

Launch Video

Using existing geometry to drive sketch curves: In this exercise, we'll be designing a rocker and applying as-built joints to dynamically connect it with other parts of the assembly. We'll be working with existing geometry from existing components to sketch and extrude a new component. By designing in one space alongside existing components, we eliminate the need to toggle back and forth between part files, as we can easily drive component features based on the existing assembly. We can also easily add an as-built joint to define the relationship between the parts.

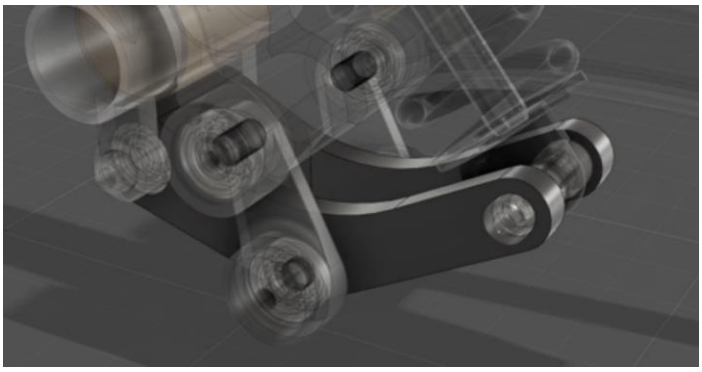

Step 1 – Edit the sketch 1. Open the **06_Top Down Design** design. 2. Right-click the visible sketch at the bottom of the assembly. 3. Choose "Edit Sketch." We'll being using the provided sketch, but adding sketch curves based on the geometry of other parts of the model.	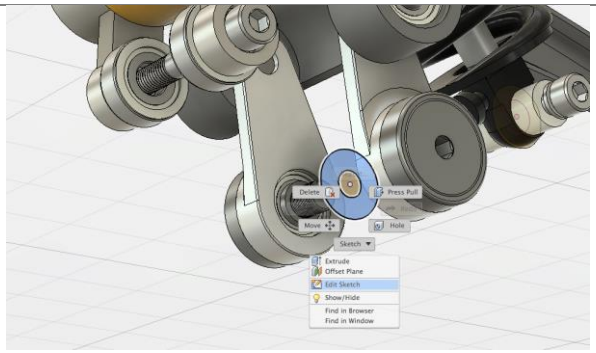 Launch Video
Step 2 – Project geometry 1. Click the **Home** icon on the ViewCube to orient the model as shown. 2. Click **Sketch > Project/Include > Project**. 3. Hover over a circular profile from one of the bolts or bearings that align with the hinge of the rocker. You'll notice the preview of the projection in red. Click to project the circular profile. Project will take a profile of any outside component, body, sketch, or construction feature	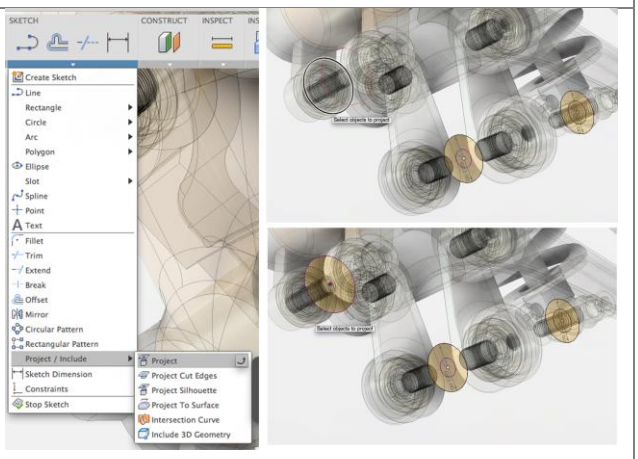

and project its profile onto the current sketch. • Note that the sketch profile projected is purple. This indicates that it is locked in and defined by geometry outside of the sketch.	
Step 3 – Build off of the project geometry 1. Click **Sketch > Circle > Center Diameter Circle**. 2. Use the center of the projected circle as the center for a new circle. 3. Type in a diameter of **35 mm**. We created a relationship between the sketch circle and the body used to project the geometry.	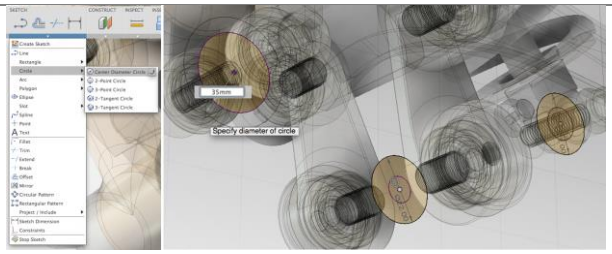 Launch Video
Step 4 – Complete the Rocker Profile 1. Click FRONT on the ViewCube. 2. Right-click the **Rocker** component in the browser, and choose "Isolate" to hide the other components. 3. Click **Sketch > Line**. 4. Draw tangent lines between the three circles, as shown at right. To automatically create the tangent constraint, pick a point on one circle then hold **Shift** and click a point on another circle. 5. Click Sketch > Fillet. Select the top two lines. Use a radius of **77 mm**. 6. Click **Stop Sketch**. 7. Right-click on **Rocker** and select **Unisolate.** Click Sketch > Constraints to manually apply constraints. See module on Sketching for more details.	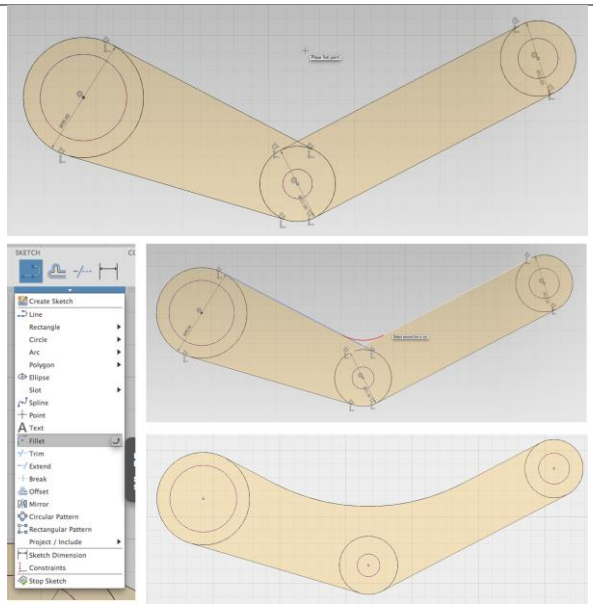

Step 5 – Add revolute as-built joint 1. Click **Assemble > As-Built Joint**. 2. Set the Type to **Revolute**. 3. For the two components, click once on the sketch, and once on the bearing. 4. For the position, click the center point of the sketch circle. 5. Click **OK**.	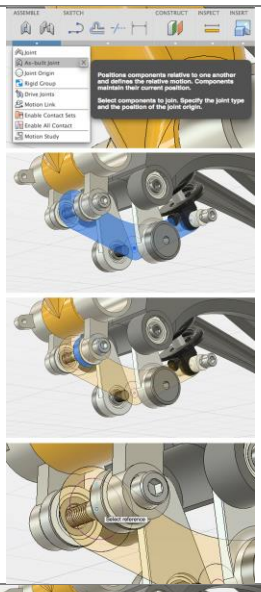
Step 6 – Add cylindrical as-built joint 1. Click **Assemble > As-Built Joint**. 2. Set the Type to **Cylindrical**. 3. For the two components, click once on the sketch, and once on the bolt. 4. For the position, choose the center point of the sketch circle. 5. Click **OK**.	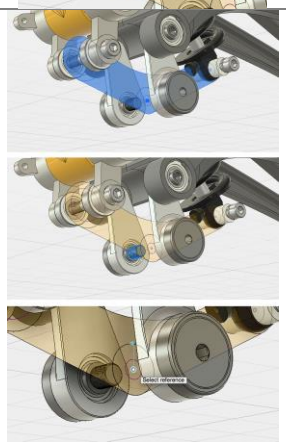 Launch Video
Step 6 – Add a revolute as-built joint 1. Click **Assemble > As-Built Joint**. 2. Set the Type to **Revolute**. 3. For the two components, click once on the sketch, and once on the bolt. 4. For the position, choose the center point of the sketch circle. 5. Click **OK**.	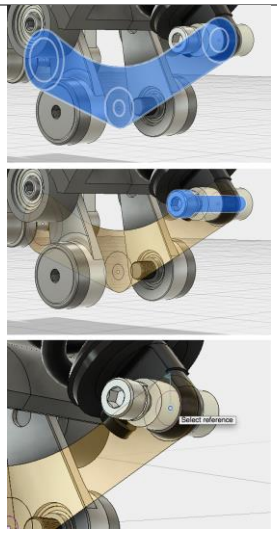 Launch Video

Extrude the sketch and interface with other parts: Now that we have a sketch and some as-built joints, we can extrude the sketch into a 3D rocker.

Step 1 – Extrude the sketch into a body 1. Continue with **06_Top Down Design.** 2. Hover over Rocker and click the dot next to the name to activate the component. 3. Click the Home view on the ViewCube. 4. Click **Create > Extrude**. 5. Click on all profiles of the sketch. 6. Set Direction to **Symmetric**. 7. Set the Distance to **24.125 mm**. 8. Set the Operation to **New Body**. 9. Click **OK**. 10. If the body is not in the "Rocker" component, be sure to find it in the browser and drag it into the "Rocker" Component.	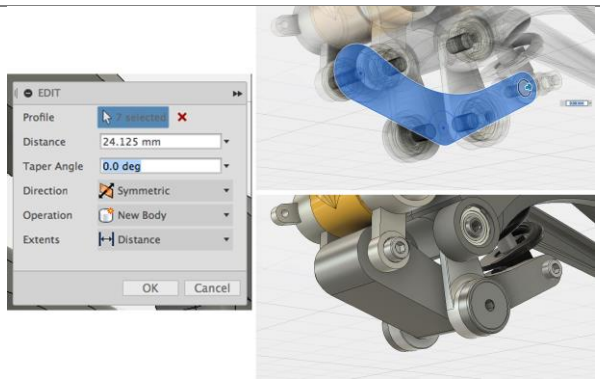 Launch Video
Step 2 – Extrude-cut a split in the rocker 1. Right-Click **Rocker** and select **Isolate**. 2. Click the light bulb next to the **Split** sketch to make it visible. 3. Click **Create > Extrude**. 4. Select the profile in the Split sketch 5. Set the Operation to **Cut**. 6. Set the Extents to **All**. 7. Click **OK**. The Split sketch contains projected geometry from other components. This is another use of top-down design in the sketching environment.	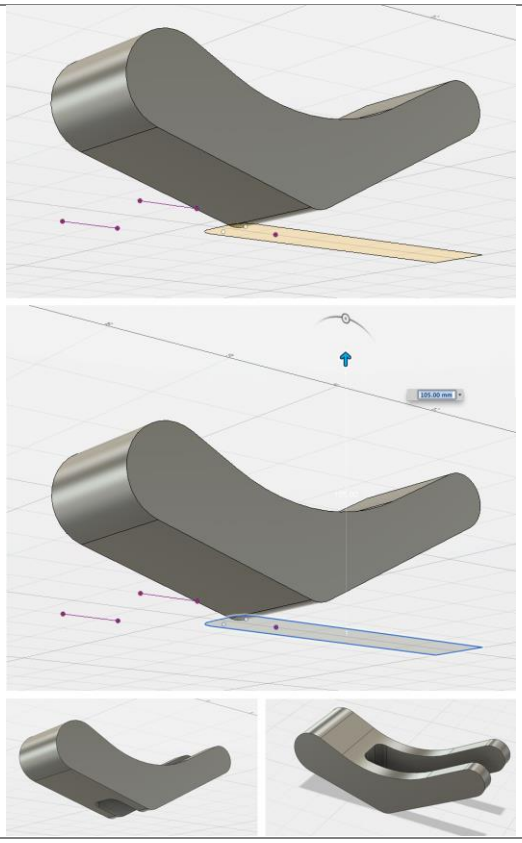

Step 3 – Boolean operation 1. Click **Modify > Combine**. 2. Select the rocker body as the Target Body. 3. Select Cut Body in the browser for the Tool Body. 4. Set the Operation to **Cut**. 5. Click **OK**. 6. Right-click on Rocker and select **Unisolate** to display all components.	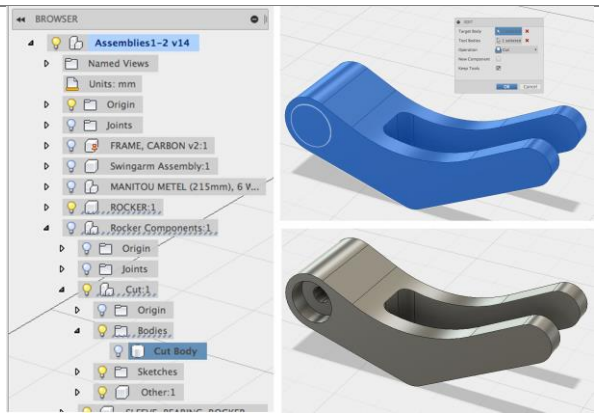 Launch Video

Challenge: Add two additional holes to the rocker based on the provided geometries and add any filets to complete the rocker in the assembly. Add a brushed steel appearance, and render the full assembly.