APPENDIX B - Ecological Report

baker
shepherd
gillespie

ECOLOGICAL CONSULTANTS
Limited Liability Partnership

New Islington Infrastructure Works, Manchester
Ecological survey & assessment

June 2009

Final
Rev 2

baker
shepherd
gillespie

ECOLOGICAL CONSULTANTS
Limited Liability Partnership

Client	Martin Stockley Associates Ltd
Job Name	New Islington Infrastructure Works, Manchester
Report title	Ecological survey & assessment
File reference	4272_004_rep_ks_msa.doc

	Signed	**Name**	**Position**	**Date**
Originated		Katy Stiles	Senior Ecologist	22/06/09
Reviewed		Guy Miller	Principal Ecologist	19/06/09

ISSUING OFFICE:

Arden House Deepdale Business Park
Ashford Road Bakewell
Derbyshire DE45 1GT
TEL: 01629 815544
FAX: 01629 815577

Report Contents

1 Introduction

1.1 Site Description

New Islington, also known as Ancoats, is located to the northeast of Manchester City Centre. This site is subject to on-going re-development and is situated between the Ashton and Rochdale Canal and surrounded by industrial buildings and residential dwellings. The survey site is a small section of the Rochdale Canal, a canal tow path and the western part of the New Islington Water Park, at OS grid reference SJ 852 985.

1.2 Proposed Works

As part of the ongoing works at the New Islington site there are proposals to submit a planning application in relation to the Water Park Operation. These works include:

- The construction of Biffins Bridge;
- The Rochdale Canal Connection;
- The construction of canal side paving within the Water Park;
- The construction of pontoons to the southeast of the Water Park;
- Provision of facilities to accommodate up to 40 long-term canal boat moorings and 10 visitor moorings;
- The construction of a park keepers hut.

There are proposals to start these works before the end of 2009.

Refer to Appendix 1 for a plan of the proposed works.

1.3 Aims of Study

Baker Shepherd Gillespie was commissioned by Martin Stockley Associates to carry out:

- A desk top study and consultation with key stakeholders;
- Walkover and aquatic plant survey; and to
- Identify any ecological constraints and provide recommendations for further survey work and mitigation measures where appropriate.

The aim of this work was to provide an ecological impact assessment of the proposed works and to inform any recommendations for further survey work and mitigation measures.

2 Methodology

2.1 Desk Study

A number of organisations were contacted to provide information on statutory and non-statutory sites of nature conservation interest, protected and notable species records, and to provide a consultation opinion on the proposed works. Table 1 below details the organisations that were contacted to provide this information.

Table 1: Organisations contacted

Organisation	Name	Information requested
Greater Manchester Ecology Unit (GMEU)	Steven Atkins/Suzanne Waymont	Statutory and non-statutory sites of nature conservation interest and protected species records.
Environment Agency	Paul Breslin	Native and non-native crayfish records.
British Waterways	Cath Ferguson	Native and non-native crayfish records.
Manchester City Council	Dave Barlow	Any available biological records and an opinion on the proposed works.

2.2 Field Survey

Senior Ecologist Katy Stiles MIEEM carried out an aquatic plant survey and a walkover ecology survey on 15th June 2009. The survey area included approximately 200 metres of the Rochdale Canal, the canal tow path and the western end of the Water Park.

Searches were made for signs of protected species such as badgers *Meles meles* and water voles *Arvicola terrestris*. The canal was assessed for its potential to support white-clawed crayfish *Austropotamobius pallipes*.

Field survey techniques described in Willby et al (2003)[1] state that: for baseline surveys to try to determine the presence of floating water-plantain *Luronium natans* within canal habitats, visual assessment methods and use of a grapnel are the most appropriate methods. Approximately 200 metres of canal towpath was walked and records were made of any vegetation. A grapnel was then used to sample the vegetation within the Rochdale Canal. One hour was spent surveying this section. A grapnel was used with a sufficient length of cord that could reach the far bank of the canal to get survey coverage of the full width of the canal.

The weather on the day of the survey was dry and mild with a light breeze.

3 Results

3.1 Desk Study

Refer to Appendix 2 for the full data trawl results.

3.1.1 Designated Sites

<u>Rochdale Canal</u>
The Rochdale Canal is a Site of Special Scientific Interest (SSSI), starting at OS grid reference SD 937 161 at Littleborough; and ending at OS grid reference SD 891 009 at Failsworth. It covers an area of 25.55 hectares. Natural England's SSSI designation states the following reasons for its designation:

"The Rochdale Canal contains important habitats for submerged aquatic plants and emergent vegetation, including extensive colonies of the nationally scarce SAC species floating water-plantain Luronium natans.

The site also supports a diverse assemblage of aquatic flora, notably its assemblage of pond weeds, Potamogeton spp; the nine species of which found in the canal represent a balanced community which reflects the water quality".

The site was notified in August 2000.

[1] Willby N, Eaton J & Clarke S (2003). Monitoring the Floating Water-plantain. Conserving Natura 2000 Rivers Monitoring Series No.11. English Nature, Peterborough.

The Rochdale Canal is also a Special Area of Conservation (SAC), an internationally important site designated in April 2005, in response to the Conservation (Natural Habitats, & c.) Regulations for the presence of an Annex II species, floating water-plantain.

The Rochdale Canal SSSI and SAC is approximately 5 km to the north of the section of the Rochdale Canal surveyed as part of this study.

Part of the Rochdale Canal, between OS grid reference SD 885 007 to SJ 847 981, is a Site of Biological Importance (SBI). Part of this SBI is situated within the survey area. This is a non-statutory designation, which reflects the sites value at a county level.

Ashton Canal
The Ashton Canal, between Openshaw and Ancoats, between OS grid references SJ 890 979 and SJ 848 981 is also a SBI. This is located approximately 250 metres to the southeast of the proposed works.

3.1.2 Protected Species

3.1.2.1 Bats

Two common pipistrelle *Pipistrellus pipistrellus* bat records and two common pipistrelle bat roost records were provided for the area of search. One pipistrelle bat record and eight pipistrelle roost records were provided for the area of search. One of the pipistrelle roost records relates to the New Islington site, but this has already been lost to the development. No other records relate directly to the site.

3.1.2.2 White-clawed crayfish

British Waterways are aware of anecdotal crayfish (unknown species) records for the Rochdale Canal upstream of the area of proposed works. No further details are available and it is therefore not possible to confirm whether this relates to native or non-native crayfish species.

Greater Manchester Ecology Unit does not hold any white-clawed crayfish records for the area of search. The SSSI citation for the Rochdale Canal states:

"Crevices in stonework support populations of white-clawed crayfish. This species is currently only recorded in Rochdale and sections of the Huddersfield Narrow Canal SSSI, within Greater Manchester."

3.1.2.3 Floating water-plantain

The Rochdale Canal SSSI citation states that "floating water-plantain occurs frequently along the whole length of the canal and in places forms dominant dense stands of its vegetative form. The species has rarely been recorded flowering, although the floating leaves are observed locally".

Information from the Joint Nature Conservation Committee (JNCC) website states that "the Rochdale Canal supports a significant population of floating water-plantain in a botanically diverse water plant community which also holds a wide range of pondweeds. The canal has predominantly mesotrophic water. This population of floating water-plantain is representative of the formerly more widespread canal populations of northwest England".

No more detailed records for this species are provided by any of the consultees.

3.1.3 Other Habitats/Species

British Waterways are aware of the presence of grass wrack pondweed *Potamogeton compressus* on the Ashton Canal. No records of this species have been provided for the Rochdale Canal.

3.1.4 Informal comments from consultees

Provided below is a summary of the comments provided by the consultees listed in Table 1.

Dave Barlow of Manchester City Council provided the following comments:

- Sand martins and house martins have been noted feeding in the area so opportunities for the provision of suitable nest sites should be explored;
- In relation to the Water Park recommendations were made for the need for more marginal vegetation;
- In relation to connecting the New Islington Water Park with the Rochdale Canal concerns were raised in relation to invasive species and litter.

Suzanne Waymont of Greater Manchester Ecology Unit (GMEU) raised the following points during a site meeting on 15th June 2009:

- Minimising shading from the bridge (if practical);
- Ensuring that the water quality within the Rochdale canal is not adversely affected by surface water run-off;
- Control and monitor invasive species (if required).

3.2 Field Survey

3.2.1 Habitat Description

<u>The Rochdale Canal</u>
The Rochdale Canal is situated between Redhill Road and the New Islington Water Park (see Photos 1 & 2). The canal banks are constructed predominantly of brick with some stone work present, and it is considered likely that this structure also continues below the water line (pers. comm. Cath Ferguson, British Waterways). No emergent aquatic vegetation is present along the canal edge and only curled pondweed *Potamogeton crispus* and Canadian pondweed *Elodea canadensis* were located within the channel. Some vegetation is growing out of the walls of the canal, mainly associated with the far (north-western) bank including buddleia *Buddleia davidii* and alder *Alnus glutinosa*. Adjacent to the tarmac tow path is a strip of amenity grassland which is characterised by annual meadow grass *Poa annua*, Yorkshire fog *Holcus lanatus*, red fescue grass *Festuca rubra,* self-heal *Prunella vulgaris* and daisy *Bellis perennis*.

Some scattered trees are present within the amenity grassland and a short line of trees and associated ornamental and native shrubs and scrub is present along the palisade fence line that divides the Water Park and the Rochdale Canal. Species within this area include willow *Salix* sp., rose *Rosa* sp., bramble *Rubus fruticosus*, ivy *Hedera helix*, willowherb *Epilobium* sp., common nettle *Urtica dioica*, herb robert *Geranium robertianum* and creeping thistle *Cirsium arvense*.

<u>New Islington Water Park</u>
The New Islington Water Park has been recently constructed and is located between the Rochdale and Ashton Canals (see Photo 4). The Water Park is constructed with solid concrete sides and concrete copings around the edge. An island is present within the channel and reed beds have been created to the south of the main channel with wildflower seed mix having been used to vegetate some of the banks. No submerged or emergent aquatic vegetation was recorded within the channel of the Water Park except for patches of green algal growth.

To the north of the Water Park is a cleared area that is characterised by crushed brick and rubble with ephemeral/short perennial vegetation having colonised (please note that, given the scope of the work, this part of the site was not surveyed in detail).

Photo1: View of the Rochdale Canal (from the development site upstream)

Photo 2: View of the Rochdale Canal (from the development site downstream)

Photo 3: View of the line of trees and shrubs

Photo 4: View of the New Islington Water Park

3.2.2 Aquatic plants

Canadian pondweed and curled pondweed were the only aquatic plant species recorded within the Rochdale Canal.

3.2.3 Invasive species

No invasive species, such as New Zealand swamp stonecrop *Crasula helmsii*, giant hogweed *Heracleum mantegazzianum* or Japanese knotweed *Fallopia japonica* were recorded during the survey.

3.2.4 Protected Species

3.2.4.1 Bats

No suitable trees or structures are present within the survey area that could support roosting bats. The Canal corridor is likely to be used by feeding and commuting bats that are present within the local area.

3.2.4.2 Nesting birds

No active bird nests were noted during the survey work; however wren *Troglodytes troglodytes*, blackbird *Turdus merula*, house sparrow *Passer domesticus* and goldfinch *Carduelis carduelis*, were recorded. The scattered trees, ornamental shrubs and scrub provide suitable habitat for nesting birds during the bird nesting season.

In addition, lapwing *Vanellus vanellus* was recorded on an area of disturbed land to the north of the Water Park and this area is considered to provide suitable nesting habitat for little ringed plover *Charadrius dubius*, which was reported to have been seen on this area by the Park Keeper Ben (pers. comm.).

3.2.5 White-clawed crayfish

No specific surveys to determine the presence or absence of white clawed-crayfish have been undertaken. The Rochdale Canal is considered to provide sub-optimal habitat for white clawed-crayfish, given the poor water quality and lack of emergent aquatic vegetation.

3.2.5.1 Water voles

No water voles or evidence of the presence of water voles was recorded during the survey work. The Canal banks are vertical stone and brick walls with no emergent aquatic vegetation. The Canal is considered to have limited potential to support this species.

3.2.6 Badgers

No evidence of the presence of badgers was recorded on site and the site is considered to be unsuitable for this species.

3.2.7 Reptiles

No specific surveys to determine the presence or absence of reptiles has been undertaken however, since the habitats present within the survey area are considered to be sub-optimal, in particular, due to the urban and highly disturbed setting, which is poorly connected to adjacent suitable habitat, this is not considered to be a constraint.

3.2.8 Amphibians

No specific surveys to determine the presence or absence of amphibians has been undertaken as part of this survey work. A single smooth newt *Lissotriton vulgaris* was recorded within the Water Park during the survey. It is considered possible that other amphibians, such as common frog and common toad, may use the Rochdale Canal and the Water Park for breeding but none were recorded on the day of the survey. The presence of great crested newts *Triturus cristatus* is considered unlikely given the lack of suitable aquatic and terrestrial habitat.

4 Assessment

4.1 Constraints on Study Information

The water clarity within the Rochdale Canal was very poor which made carrying out a visual assessment survey for floating water-plantain difficult. However, a grapnel was used to sample aquatic vegetation within the canal as a more effective survey technique so this is not considered to be a significant constraint.

4.2 Potential Impacts

4.2.1 Designated Sites

Rochdale Canal SAC is located approximately 5 km to the northeast of the survey site. This SAC is designated due to the presence of internationally important populations of floating water-plantain. There are proposals to construct a bridge over the canal, link the canal to the New Islington Water Park and provide a 40 berth marina within the Water Park.

Under regulation 48(1) of the Habitats Regulations an Appropriate Assessment is required for any plan or project which either alone or in combination with other plans or projects would be likely to have a significant effect on a European Site, and is not directly connected to the management of the site for nature conservation.

The September 2008 Habitats Regulation Assessment (HRA) of the North West Regional Spatial Strategy identifies key environmental conditions required to support the site integrity, which include maintenance of water levels, avoidance of pollution and nutrient enrichment, limited human disturbance and control of invasive and non-native species. Within the HRA Appropriate Assessment the following impacts were identified: "development nearby increases risk of water pollution and tipping"; and "housing development leading to recreational pressure including disturbance". Mitigation measures are suggested within the report to address these potential impacts which include re-wording/writing supporting text within the RSS to better address possible impacts from recreational pressure. The management required to maintain site integrity identified I the HRA is limiting human disturbance. The section of the HRA which describes the current status of the Rochdale Canal SAC states that increased fishing and boat movements could affect interest features of the site.

Linking the Rochdale Canal SAC with the New Islington Water Park has the potential to result in an increase in boat traffic which could result in an impact on the Rochdale Canal SAC. This link is also likely to increase other recreational pressure (such as fishing and other general access) along the Rochdale Canal SAC with the potential to give rise to an increase in disturbance.

4.2.2 Habitats

4.2.2.1 General legislation and policy guidance for habitats and biodiversity

Planning Policy Statement 9: Biodiversity and Geological Conservation (PPS9) [2] was published in August 2005 and provides a list of key principles to which local planning authorities and other decision makers should adhere to in order to assure conservation of biodiversity. Of particular relevance is Key Principle vi, which states that: the aim of planning decisions should be to prevent harm to biodiversity interests and where granting planning permission would significantly harm those interests, the local planning authority "*will need to be satisfied that the development cannot be reasonably located on any alternative sites that would result in loss or no harm. In the absence of such alternatives, local planning authorities should ensure that before planning permission is granted, adequate mitigation measures are put in place. Where a planning decision would result in significant harm to biodiversity… which cannot be prevented or adequately mitigated against, appropriate compensation measures should be sought. If significant harm cannot be prevented, adequately mitigated against, or compensated for, then planning permission should be refused.*"

Paragraph 12 of PPS9 states the following in relation to habitats:

> *Networks of natural habitats provide a valuable resource. They can link sites of biodiversity importance and provide routes or stepping stones for the migration, dispersal and genetic exchange of species in the wider environment. Local authorities should aim to maintain networks by avoiding or repairing the fragmentation and isolation of natural habitats through policies in plans. Such networks should be protected from development, and, where possible, strengthened by or integrated within it [cont…]*

Paragraph 14 of PPS9 states the following in relation to biodiversity within developments:

> *Development proposals provide many opportunities for building-in beneficial biodiversity or geological features as part of good design. When considering proposals, local planning authorities should maximise such opportunities in and around developments, using planning obligations where appropriate.*

[2] ODPM 2005 Planning Policy Statement 9: Biodiversity And Geological Conservation. HMSO, London

4.2.2.2 Potential Impacts

The proposed work to link the New Islington Water Park with the Rochdale Canal will result in the loss of a small area of amenity grassland and some scattered young trees and shrubs. The loss of these features is not considered to be ecologically significant.

The proposed works to provide a 40 berth marina is likely to result in an increase in recreational usage, which could give rise to an increase in litter, pollution (for example fuel spills from boats) and disturbance, which could potentially give rise to a negative impact on newly created habitats and the species associated with them.

4.2.3 Protected Species

4.2.3.1 Floating water-plantain

4.2.3.2 Legislation, Policy Guidance & Ecology

Floating water-plantain is protected under Schedule 8 the Wildlife and Countryside Act 1981 (as amended 2000). This makes it an offence to:

- Intentionally pick, uproot or destroy any wild plant listed under Schedule 8
- Sell, offer or expose for sale, or has in his possession or transports for the purposes of sale, any live or dead wild plant contained in Schedule 8, or any part of, or anything derived from, such a plant.

The legislation also states that a person shall not be guilty of an offence by reason of any act made unlawful by that subsection if he shows that the act was an incidental result of a lawful operation that could not reasonably be avoided.

Floating water-plantain is listed in Annexe II of the European Union Directive on the Conservation of Natural Habitats and of Wild Fauna and Flora (92/43/EEC), the Habitats Directive. Floating water plantain is a UK BAP and Greater Manchester LBAP priority species.

The information provided below on the ecology of floating water-plantain is from Willby, et al (2003). Floating water-plantain is a small aquatic plant endemic to Europe. It can exist in a number of growth forms, which allows it to colonize a variety of habitats. These range from upland lakes and small fast, flowing streams to deep, sluggish rivers and their backwaters, to temporary pools, as well as canals, ditches, reservoirs, ponds and peat cuttings. This species appears to be tolerant to a range of dissolved chemicals, but is sensitive to competition from larger species that may increase in response to eutrophication, acidification, biological invasion and natural succession.

In canals there are a number of supporting habitat characteristics that are necessary for perennial flowering populations. These include:

- Substrate: marginal areas with stable fine gravel, and or silt;
- Water depth/flow regime: very slowing moving water in depth range 0.5 m-1.5 m;
- Disturbance regime and inter-specific competition: Sufficient disturbance to restrict encroachment by emergent vegetation and displacement by canopy forming species;
- Connectivity: maintenance of populations in upstream reservoirs or offline areas adjacent but not linked to the canal.

These habitat characteristics can be devalued through:

- Boat traffic, which has the potential to cause substrate destabilisation as fine sediments are frequently remobilised;

- A decrease in light availability bought about by eutrophication or high suspended sediment loads will reduce the lower limits of plant rooting. Boat traffic has the potential to exacerbate suspended sediment problems and, at high levels, can lead to almost permanent turbid conditions;
- High levels of boat traffic may result in the habitat being too unstable for plants to persist.

4.2.3.3 Potential Impacts

No floating water-plantain was recorded during the survey of the 200 metre section of the Rochdale Canal within the study area. Floating water-plantain is known to occur approximately 5 km upstream within the SAC; however there are no available records for the area of the proposed works.

The proposed works to construct a bridge and link the Rochdale Canal to the New Islington Water Park are not considered likely to have a direct impact on floating water-plantain. However, the provision of a 40 berth marina within the Water Park, which is likely to result in an increase in boat traffic on the Rochdale Canal, could lead to an impact on the integrity of the SAC.

4.2.3.4 Bats

4.2.3.5 Legislation & Policy Guidance

Bats are listed as European Protected Species under Schedule 2 of the Conservation (Natural Habitats, &c.) Regulations 1994 (as amended 2009) and are protected under the Wildlife and Countryside Act 1981 (as amended by the Crow Act 2000). Taken together, these make it an offence to:

a. Deliberately capture or intentionally take a bat;
b. Deliberately or intentionally kill or injure a bat;
c. To be in possession or control of any live or dead bat or any part of, or anything derived from a bat;
d. Damage or destroy a breeding site or resting place of a bat;
e. Intentionally or recklessly obstruct access to any place that a bat uses for shelter or protection;
f. Intentionally or recklessly disturb a bat while it is occupying a structure or place that it uses for shelter or protection;
g. Deliberately disturb any bat, in particular any disturbance which is likely to (i) impair their ability to survive, breed, reproduce or to rear or nurture their young; or in the case of hibernating or migratory species, to hibernate or migrate; or (ii) to affect significantly the local distribution or abundance of the species to which they belong.

A bat roost may be any structure a bat uses for breeding, resting, shelter or protection. It is important to note that since bats tend to re-use the same roost sites, current legal opinion is that a bat roost is protected whether or not the bats are present at the time.

Although the law provides strict protection to bats, it also allows this protection to be set aside (derogation) under Section 39 of the Conservation (Natural Habitats &c.) Regulations 1994 (as amended 2009) through the issuing of licences. These licences in England are currently determined by Natural England (NE) for development works and are known as European Protected Species (EPS) licences.

Where a lawful operation is required to be carried out, which is likely to result in one of the above offences, an EPS licence may be obtained from NE to allow the operation to proceed. However, in accordance with the requirements of Section 44 of the Conservation (Natural Habitats, & c) Regulations 1994 (as amended 2009), an EPS licence can only be issued where the following derogation requirements are satisfied:

1. The proposal is necessary 'to preserve public health or public safety or other imperative reasons of overriding public interest including those of a social or economic nature and beneficial consequences of primary importance for the environment';
2. 'There is no satisfactory alternative';
3. The proposal 'will not be detrimental to the maintenance of the population of the species concerned at a favourable conservation status in their natural range.'

In addition to this legal protection, seven bat species are listed in the UK Biodiversity Action Plan (BAP) and are listed as Species of Principal Importance under the provisions of the NERC Act 2006. PPS9 gives guidance on the treatment of Species of Principal Importance and states that local authorities should ensure that they are protected from the adverse effects of development, where appropriate, by using planning conditions or obligations. Pipistrelle bat is a Greater Manchester LBAP priority species.

4.2.3.6 Potential Impacts

No buildings or other structures are present on site that are considered to have potential to support roosting bats. Some scattered trees will have to be removed as part of the proposed works, but since none of these are considered to support suitable features to support roosting bats an impact is not anticipated.

Bats are considered likely to be using the Rochdale Canal corridor for feeding and commuting. The proposals to construct a new bridge and link the Canal to the New Islington Water Park could have short-term negative impacts if, for example, lighting is used during the evening for late night working. Long-term negative impacts could occur if strong, high-level street style lighting is incorporated into the development design.

4.2.3.7 Nesting birds

4.2.3.8 Legislation & Policy Guidance

All nesting birds are protected under the Wildlife and Countryside Act 1981, which makes it an offence to kill, injure or take any wild bird or take, damage or destroy its nest whilst in use or being built, or take or destroy its eggs. In addition to this, for some rarer species (listed on Schedule 1 of the Act, including little ringed plover), it is an offence to disturb them while they are nest building or at or near a nest with eggs or young, or to disturb the dependent young of such a bird.

A number of bird species are also listed as Species of Principal Importance under the provisions of the NERC Act 2006. PPS9 gives guidance on the treatment of such species and states that local authorities should ensure that they are protected from the adverse effects of development, where appropriate, by using planning conditions or obligations. No species of principle importance have been recorded on the site. House sparrow and lapwing, which were both recorded during the survey, are UK BAP priority species.

4.2.3.9 Potential impacts

The proposed works will involve the removal of scattered trees and a small area of shrubs that currently divide the Water Park and the Rochdale Canal. These could potentially be used by nesting birds during the bird breeding season (generally March to late August, although this can vary). The removal of this vegetation during the bird nesting season could damage and destroy any active bird nests that may be present at the time of the works, causing an offence under the legislation. The proposals to provide a 40 berth marina and construct canal side paving are within close proximity to the area of disturbed land to the north of the Water Park. If little ringed plover is breeding within this area, which is possible given the characteristics of the habitat and the recent sightings of this bird, and works are undertaken during the bird nesting season, the works could potentially disturb this species, which would be an offence under the legislation. A direct impact, through loss of habitat, is not anticipated at this stage.

4.2.3.10 White clawed-crayfish

4.2.3.11 Legislation, Policy Guidance & Ecology

White-clawed crayfish is protected under Wildlife and Countryside Act 1981 (as amended by the CRoW Act 2000). This makes it illegal either to take it from the wild or sell it without an appropriate licence from the appropriate nature conservation agency.

In addition, white clawed crayfish is a UK Biodiversity Action Plan species, a Greater Manchester LBAP priority species, and is listed as a Species of Principal Importance under the provisions of the NERC Act 2006. PPS9 gives guidance on the treatment of such species and states that local authorities should ensure that they are protected from the adverse effects of development, where appropriate, by using planning conditions or obligations.

The information presented below on white-clawed crayfish ecology is taken from Holdich (2003)[3].

The white-clawed crayfish is Britain's only native crayfish. White-clawed crayfish require clean, well oxygenated mesotrophic water. In terms of habitat requirements they need refuges within the water channel such as cobbles or rubble interspersed with larger structure such as boulders and logs, stands of submerged vegetation on the bed or at the base of the bank, areas of vertical bank that are undercut to provide shelter, bankside vegetation to provide shade, cover and a food sources and a varied flora and fauna to provide a source of food and calcium.

4.2.3.12 Potential Impacts

No specific surveys to determine the presence or absence of white-clawed crayfish have been undertaken. No specific white-clawed crayfish records were provided for the area of search. GMEU do not hold any records; however within the Rochdale Canal SBI citation the presence of white-clawed crayfish is known to be recorded in sections of the Rochdale Canal and in sections of the Huddersfield Narrow Canal SSSI. British Waterways are aware of anecdotal records for the Rochdale Canal but they do not hold any detailed records.

It is considered unlikely that any white-clawed crayfish present within the vicinity of the proposed works on the Rochdale Canal, given the lack of suitable habitat and aquatic vegetation and poor water quality. The proposed works associated with the Rochdale Canal are not considered likely to have an impact on white-clawed crayfish.

4.2.3.13 Water voles

4.2.3.14 Legislation & Policy Guidance

Water voles are protected under the Wildlife and Countryside Act 1981 (as amended by the CROW Act 2000). This makes it an offence to kill, injure or take any water vole, damage, destroy or obstruct access to any place of shelter or protection that the animals are using, or disturb voles while they are using such a place.

In addition, water vole is a UK Biodiversity Action Plan species, a Greater Manchester LBAP priority species and is also listed as a Species of Principal Importance under the provisions of the NERC Act 2006. PPS9 gives guidance on the treatment of Species of Principal Importance and states that local authorities should ensure that they are protected from the adverse effects of development, where appropriate, by using planning conditions or obligations.

4.2.3.15 Potential Impacts

No evidence of the presence of water voles was recorded during the survey. No records were provided as part of the desk top study and the site is considered to be unsuitable habitat for this

[3] Holdich D (2003). Ecology of the White-clawed Crayfish. Conserving Natura 2000 Rivers Ecology Series No.1. English Nature, Peterborough

species, with a lack of emergent vegetation and a lack of suitable burrowing habitat. The proposed works are not considered likely to have an impact on this species.

4.2.3.16 Badgers

4.2.3.17 Legislation & Policy Guidance

Badgers are protected under the Badgers Act 1992. This makes it an offence to wilfully kill, injure, take, possess or cruelly ill-treat a badger, or to attempt to do so; or to intentionally or recklessly interfere with a sett. Sett interference includes disturbing badgers whilst they are occupying a sett, as well as damaging or destroying a sett or obstructing access to it. A badger sett is defined in the legislation as "a structure or place, which displays signs indicating current use by a badger"

4.2.3.18 Potential Impacts

No evidence of the presence of badgers was identified and the area is considered to be unsuitable for badgers and the creation of setts. No records of badgers were provided as part of the desk top study. The proposed works are not considered likely to have an impact on badgers.

4.2.3.19 Reptiles

4.2.3.20 Legislation & Policy Guidance

All British reptiles are protected under the Wildlife and Countryside Act 1981 (as amended by the CRoW Act 2000). Grass snake, slow worm, common lizard and adder are protected against intentional killing or injury and against sale. In addition, all British reptiles are UKBAP priority species.

4.2.3.21 Potential Impacts

No reptiles were recorded on site and the habitats present are considered to be unsuitable for reptiles. No records were provided as part of the desk top study. The proposed works are considered unlikely to have an impact on reptiles.

4.2.3.22 Amphibians

4.2.3.23 Legislation & Policy Guidance

Great crested newts and their habitats in water and on land are protected under the Wildlife and Countryside Act 1981 (as amended by the CRoW Act 2000), and by the Habitats Regulations 1994 (as amended 2009). In summary, these make it an offence to damage, destroy or obstruct any place used by great crested newts for breeding and shelter, disturb a great crested newt, or kill, injure or take any great crested newt.

In addition, great crested newt is a UK Biodiversity Action Plan Priority Species and is listed as a Species of Principal Importance under the provisions of the NERC Act 2006. PPS9 gives guidance on the treatment of Species of Principal Importance and states that local authorities should ensure that they are protected from the adverse effects of development, where appropriate, by using planning conditions or obligations.

Common frog, common toad and smooth newt is given partial protection by Section 9(5) of the Wildlife and Countryside Act 1981 (as amended). This legislation prohibits sale, transportation or advertising for sale, but is of limited relevance in relation to land development.

4.2.3.24 Potential Impacts

A smooth newt was recorded within the channel of the Water Park during the survey. No other amphibians were recorded. The Rochdale Canal and the Water Park are considered to provide unsuitable breeding conditions for great crested newts, due to the lack of suitable aquatic

vegetation and turbid water. No amphibian records were provided as part of desk top study. The proposed works are not considered likely to have an impact on amphibians.

5 Recommendations

5.1 Further Survey

5.1.1 Nesting birds

It is recommended that any vegetation clearance works are undertaken outside the bird nesting season. If this is not possible, then it is recommended that a suitably qualified ecologist carries out a survey prior to any vegetation removal to try to determine the presence or absence of active nests. If any active nests are recorded, then works would need to be delayed until the birds had fledged.

If the paving works and construction of the pontoons are to be undertaken during the bird breeding season, then it is recommended that a little ringed plover survey is undertaken to determine if a breeding pair is present. If little ringed plover were found to be nesting then an assessment of the proposed works would need to be undertaken to determine if they are likely to cause disturbance to this bird whilst nesting, and to draw up a strategy for working without causing an offence.

5.2 Mitigation & Enhancement Measures

5.2.1 Designated Sites

Due to the proximity of the Rochdale Canal SAC, it is likely that an Appropriate Assessment will be required in order to assess the potential impacts of the development on this European Site. The Appropriate Assessment would be undertaken by the relevant competent authority, namely Manchester City Council, but would require significant input from the developer.

5.2.2 Habitats

It is recommended that as part of the proposed development works any opportunities for native planting schemes along the towpath, for example, through planting native scrub and trees, should be taken. Further advice could be provided if this is feasible.

It is recommended that to improve the water quality within the Water Park more "floating islands" should be created to increase the amount of emergent and aquatic vegetation and to provide opportunities for nesting birds and as a refuge for fish and invertebrates. These should only be planted with common reed *Phragmites australis*.

5.2.3 Protected Species

5.2.3.1 Bats

It is recommended that, during the course of the construction works, the New Islington Water Park and the Rochdale Canal are not artificially lit in order to avoid an impact on bats that may be using the area for feeding and commuting. In addition, it is recommended that obstructions across the canal are minimised, for example, by avoiding the use of netting or other materials that could potentially ensnare bats.

In the long-term, it is recommended that if any lighting is proposed along the Rochdale Canal then consideration should be given to the use of low level, bollard style lighting, to avoid and reduce any impacts on feeding and commuting bats.

5.2.3.2 Nesting birds

As part of the proposed works the site could be enhanced for nesting birds through the incorporation of artificial nest boxes, for species such as wagtails and kingfisher, into the new Rochdale Canal banks. In addition, bird boxes could be erected on the park keepers hut to encourage species like house sparrow to nest.

5.2.3.3 White clawed-crayfish

Although the presence of white clawed-crayfish is considered to be unlikely, it is recommended as a precaution, that when the Rochdale Canal is drawn down and works to link the Water Park are carried out, an ecologist should be present on site to provide advice on the best course of action, in case any crayfish (native or non-native) are discovered.

6 Appendix 1: Proposed works

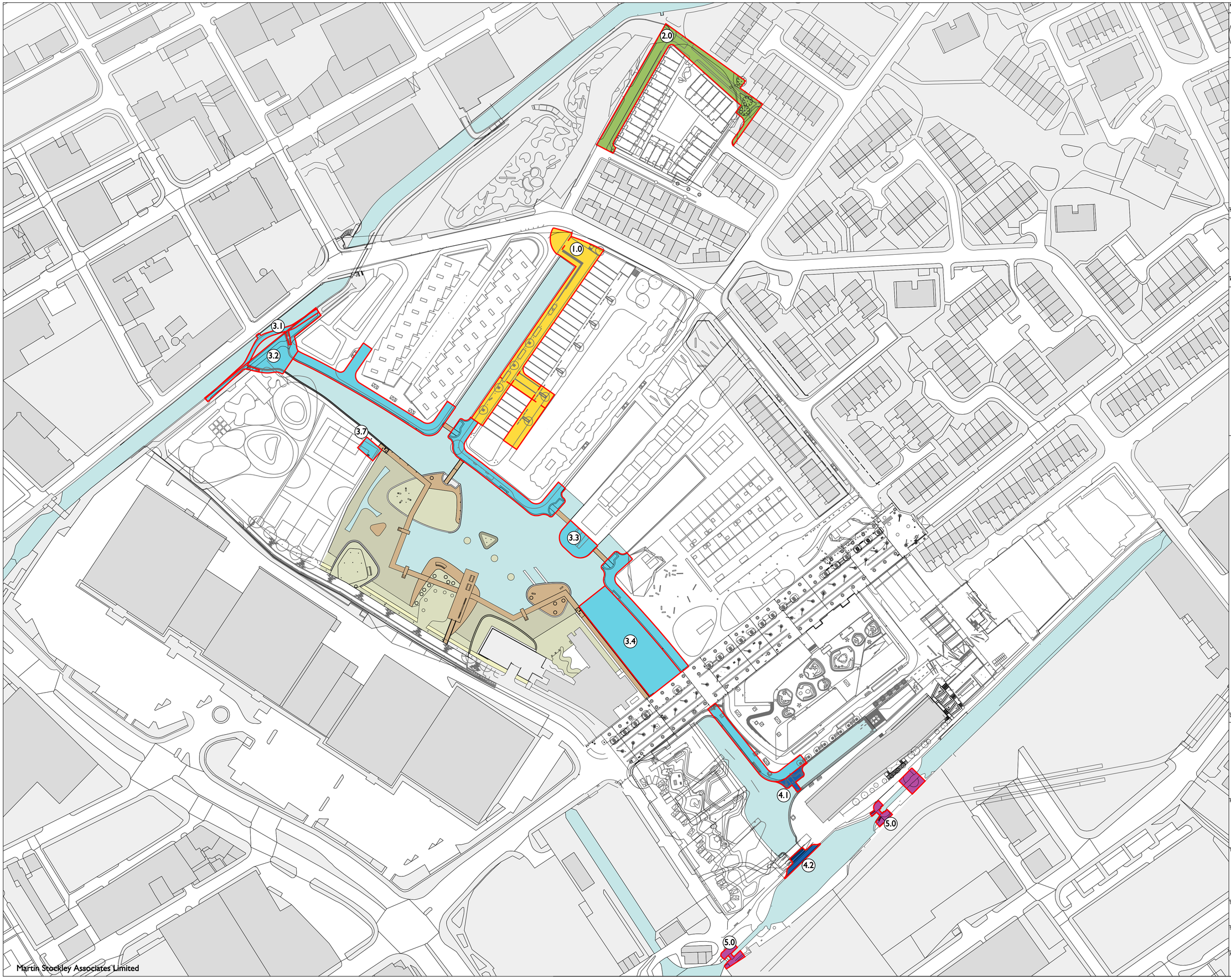

Martin Stockley Associates Limited

Key Plan:

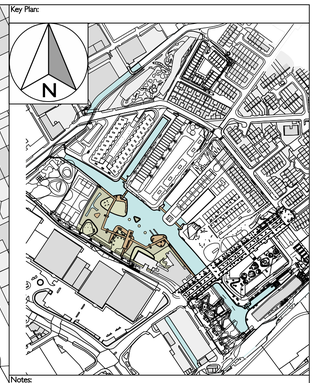

Notes:

This drawing is to be read in conjunction with all relevant Architect's and Engineer's drawings and the specification.

This drawing should not be scaled.

All dimensions are to be verified by the contractor on site. All discrepancies should be reported to the C.A. prior to the commencement of the works.

Key:

1. Tutti Frutti -Public Realm
2. Downley Drive -Public Realm
3. Water Park Operation
   - 3.1 Biffins Bridge
   - 3.2 Rochdale Canal Connection
   - 3.3 Canalside Paving
   - 3.4 Pontoons
   - 3.7 Pump Out / Park Keeper's Hut
4. Sequence A
   - 4.1 Chips Swing Bridge
   - 4.2 Ashton Canal Connection
5. Lock Bridge Enhancements

DATE:	REV:	DESCRIPTION:	DRWN:	CHKD:

MARTIN STOCKLEY ASSOCIATES
Consulting Engineers

MANCHESTER: Carver's Warehouse, 77 Dale Street, Manchester, M1 2HG. **T:** 0161 228 6757 **F:** 0161 228 6607
LONDON: 1st Floor Gensurco House, 46a Rosebery Avenue, London. EC1R 4RP. **T:** 020 7278 1555 **F:** 020 7251 2087
ONLINE: www.martinstockleyassociates.co.uk

Project:
New Islington
Manchester
NWDA Public Realm

Title:
Public Realm and Infrastructure
Site Boundaries

WORK IN PROGRESS

Status:
INFORMATION

Scale:	Date:	Drawn:	Checked:
1:1000 @ A1	May 09	LHo	PM

Job Number:	Drawing Number:	Revision:
180/30	(SK) 001	P01

7 Appendix 2: Data trawl results

Katy Stiles

From: Stephen Atkins [stephen.atkins@tameside.gov.uk]
Sent: 17 June 2009 14:39
To: Katy Stiles
Subject: White-Clawed Crayfish [Scanned]
Attachments: Ancoats.pdf

Katie,

Further to our telephone conversation we do not hold any records for White-Clawed Crayfish along the Rochdale Canal. There is an error in the key on the search map. The star for Grasswrack Pondweed records should be pale blue. An amended copy of the map is attached.

Apologies

Steve

Steve Atkins
Biodiversity Information Officer

E-mail: stephen.atkins@tameside.gov.uk
Telephone: 0161 371 8146
Fax: 0161 371 8014

Ryecroft Hall
Manchester Road
Audenshaw
Manchester M34 5ZJ

Greater Manchester
Ecology Unit

Greater Manchester Ecology Unit
Ryecroft Hall, Manchester Road, Audenshaw
Lancashire M34 5ZJ

Email: gmeu@tameside.gov.uk

Principal Ecologist:
Derek Richardson MIEEM

Greater Manchester
Ecology Unit

Samantha Mellor
Baker Shepherd Gillespie
Arden House
Deepdale Business Park
Bakewell
Derbyshire
DE45 1GT

Your ref : *Job no. 4272*
Our ref : *SA/0999 1326-09*
Doc ref : *SA17-1*
Contact : *Steve Atkins*
Date : *17th June 2009*

Dear Samantha,

ECOLOGICAL SEARCH – ANCOATS GR SJ851984

Please find enclosed the ecological search for the above location and the SBI citations for Ashton Canal (West) SBI and Rochdale Canal Stott's Lane – Ducie Street Basin SBI.

Certain stretches of the Rochdale Canal have been designated as a Site of Special Scientific Interest (SSSI) and a Special Area for Conservation (SAC). The Canal supports the European Protected Species floating water plantain (*Luronium natans*). It is also of note that certain stretches support white-clawed crayfish, which has some legal protection and American pondweed (*Potamogeton epihydrus*), a red data book species. Floating water plantain also occurs on the Ashton Canal (West) SBI.

The Pipistrelle sp. bat roost shown on the map at SJ853984 has been lost to the New Islington development.

Aside from the species shown on the map the Ecology Unit has no other records for protected species within the area of search. You should note, however, that our records are not comprehensive and a negative result does not indicate the absence of protected species from the area of search. We advise that all suitable habitats and structures impacted by the proposals are surveyed for protected species. For detailed bat records I would suggest you contact the South Lancashire Bat Group email records.slbg@talktalk.net and for bird records the County Bird Recorder Judith Smith (tel 01942 712615) or email judith@gmbirds.freeserve.co.uk.

An invoice for this service of £100.00 plus VAT has also been included; please pass this on to your accounts department to ensure prompt payment.

Yours sincerely

Steve Atkins
Biodiversity Information Officer

Encs

SITES OF BIOLOGICAL IMPORTANCE IN GREATER MANCHESTER
Greater Manchester Ecology Unit
Ryecroft Hall, Manchester Road, Audenshaw, Manchester M34 5ZJ
(Private & Confidential)

SITE NAME : Rochdale Canal Stott's Lane – Ducie Street Basin		**DISTRICT** : Manchester
LOCATION :	**GRID REF** : SD885007 – SJ847981	**GRADE** : A

SITE DESCRIPTION

The Rochdale Canal runs through the districts of Manchester, Oldham and Rochdale and passes out of the county of Greater Manchester over the Pennines. The canal which contains internationally important populations of floating water plantain (*Luronium natans*), was designated a European cSAC (candidate Special Area for Conservation) in May 2001. The national importance of this species and the canal's assemblage of pondweed species (*Potamagetum spp*) were recognised by the designation of a SSSI in August 2000. The statutory designations are applied to the Oldham and Rochdale sections of the canal. In addition, the parts in Manchester support regionally important aquatic habitat and species, including floating water plantain.

Floating water plantain (a European Protected Species under the Habitats Regulations 1994) occurs frequently along the whole length of the canal and in places forms dominant dense stands of its vegetative form. The species has rarely been recorded flowering, although the floating leaves are observed locally.

Nine species of pondweed (*Potamagetum*) have been recorded and/or reported in the past. Of these, five have been recorded in recent surveys. American pondweed (*P. epihydrus*), a Red Data Book species, is recorded at high density along the canal. The populations of this species are considered the best in Great Britain. Other pondweeds recorded are slender (*P. berchtoldii*), curled (*P. crispus*), blunt-leaved (*P. obtusifolius*) and broad-leaved (*P. natans*).

The submerged and emergent flora is well developed along the canal. In addition to the species already described, the canal supports frequent colonies of unbranched bur-reed, common water plantain and arrowhead. Water violet, ridged hornwort and water soldier all have limited distributions in Greater Manchester and are recorded in scattered locations along the canal. Alternate-leaved water-milfoil is noted in the SSSI citation although, there are no recent records for this species.

The rare liverwort (*Riccia fluitans*) and the moss *Fontanalis sp.* produce dominant colonies of vegetation. They are particularly evident in the Slattocks area of Oldham and Rochdale.

The extremely invasive New Zealand pigmyweed (*Crassula helmsii*) is also recorded in several locations and appears to have increased in abundance over the last few years.

Fringing marginal vegetation is usually dominated by reed sweet-grass although, stands of bulrush (*Typha latifolia*) also occur. Other marginal species include yellow flag, bottle sedge, watermint, gipsywort, water forget-me-not and marsh bedstraw.

The stonework along the canal provides an additional important habitat. It provides a substrate for submerged colonies of fresh water sponge. Crevices in the stonework support populations of white-clawed crayfish. This species is currently only recorded in Rochdale and sections of the Huddersfield Narrow Canal SSSI, within Greater Manchester. Terrestrial stonework supports ferns including lady fern and royal fern. The latter, has an extremely limited distribution in Greater Manchester. There are extant records of this species in both Rochdale and Oldham sections of the canal and historical records for the Manchester section.

SITES OF BIOLOGICAL IMPORTANCE IN GREATER MANCHESTER
Greater Manchester Ecology Unit
Ryecroft Hall, Manchester Road, Audenshaw, Manchester M34 5ZJ
(Private & Confidential)

SITE NAME : Rochdale Canal Stott's Lane – Ducie Street Basin		**DISTRICT** : Manchester
LOCATION :	**GRID REF** : SD885007 – SJ847981	**GRADE** : A

SITE DESCRIPTION - CONTINUED

Description Continued Page 2 of 2

The bankside vegetation provides suitable habitat for water voles and good populations of this species have been recorded in Rochdale. Five species of coarse fish have also been recorded.

Breeding birds include moorhen, coot, mallard and Canada goose. In addition, less frequent breeding species include a number of pairs of grey wagtail and mute swan (one pair breeding in 2000). Other species breeding in or adjacent to the canal corridor and using it for feeding include swallow, spotted flycatcher, kingfisher and song thrush. Heron regularly visit to feed.

The SBI designation also includes the bankside vegetation along the towpath. In many places the towpath is bounded by relatively species-poor hedgerows. Hawthorn is the predominant species, but elder, ash and sycamore are also present. Bankside grassland is generally species-poor neutral grassland dominated by Yorkshire fog. However, smaller areas of both richer neutral grassland and acidic grassland also occur.

The site is being restored to a navigable waterway, which is due to open in summer 2002. The site is managed and owned by British Waterways.

The towpath provides a frequently used recreational facility for both pedestrians and fishermen.

Note: This SBI review is based on four site visits in 2001. Additional information is supplied by British Waterways and from a survey by Penny Anderson Associates commissioned in 1999 for the Canal Restoration Group.

SITES OF BIOLOGICAL IMPORTANCE IN GREATER MANCHESTER
GREATER MANCHESTER ECOLOGY UNIT
Ryecroft Hall, Manchester Road, Audenshaw, Manchester M34 5ZJ
(PRIVATE & CONFIDENTIAL)

SITE NAME : Rochdale Canal Stott's Lane – Ducie Street Basin			**DISTRICT** : Manchester
LOCATION :			**GRID REF** : SD885007 – SJ847981
GRADE : A	**AREA (HA)** : 8.9 (4.7km)	**ALTITUDE (M)** : 110m	**DATE** : 11.7.01
STATUS : cSAC, SSSI	**SURVEYOR** : T R Hughes		**INITIAL SURVEY DATE** : 10.83
NO OF REVISIONS : 3	**OWNER** : British Waterways		**DISTRICT REF** : F12

HABITATS PRESENT	Area (ha)	FEATURES OF INTEREST	Importance
Woodland broadleaved (semi-nat)		Vegetation type	3
Woodland plantation		Ferns	3
Scrub		Bryophytes	3
Acid grassland	0.01	Fungi	
Neutral/basic grass (species-rich)		Mammals	3
Neutral/basic grass (species-poor)	0.01	Birds	1
Tall herbaceous		Amphibia	
Ericaceous heath		Reptiles	
Bog		Lepidoptera	
Marsh/fen	0.1	Odonata	1
Reedbed	1.8	Other invertebrates	3
Lake/pond/dam		Geological	
Canal	6.7	Other - Fish	1
River/stream/ditch		Other	
Quarry/cliff/rock/wall	0.4		
Ruderal			
Other			

AREA Areas of habitat covering less than 0.1ha. recorded as 0.01	**IMPORTANCE** Blank - Not known 1 - Small but significant 2 - Substantial 3 - Great

COMPLETE FOR GAINS AND PARTIAL LOSSES ONLY

Loss since Last Survey :	Loss since First Survey : 26.5
Primary cause : Splitting site	Secondary cause :
Gain since Last Survey : +3.4	Gain since First Survey : 3.4
Primary cause : More accurate GIS mapping tool	Secondary cause :
Net change since Last Survey : +3.4	Net change since First Survey : -23.1

SITES OF BIOLOGICAL IMPORTANCE IN GREATER MANCHESTER
Greater Manchester Ecology Unit
Ryecroft Hall, Manchester Road, Audenshaw, Manchester M34 5ZJ
(Private & Confidential)

Site Name : Rochdale Canal Stott's Lane – Ducie Street Basin		**District** : Manchester
Location :	**Grid Ref** : SD885007 – SJ847981	**Grade** : A

SITE LOCATION MAP (1:25000)

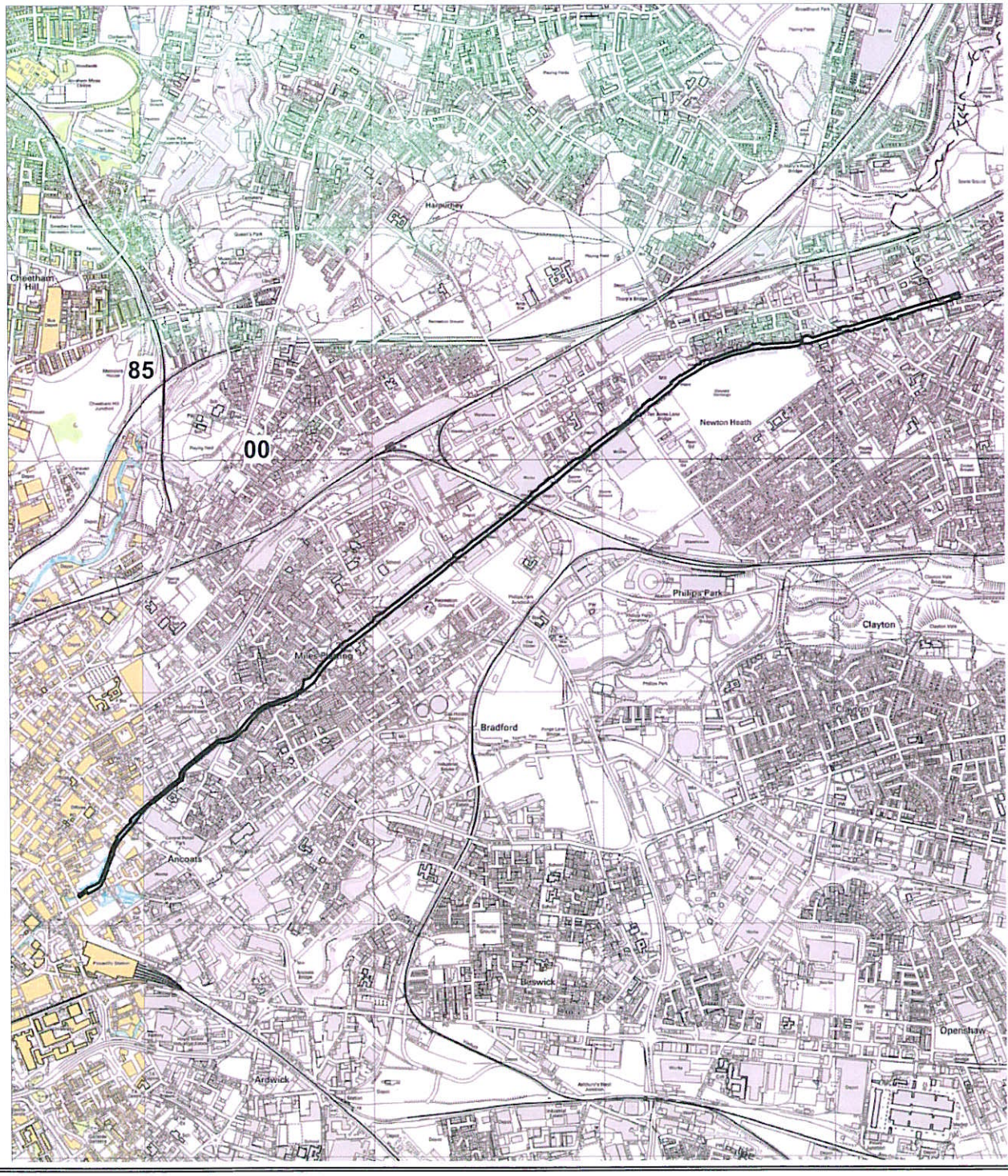

CD: SBI MAPS/CURRENT SBI MAPS/F12-MANCHESTER/F12-4

Date: 11.7.01

SITES OF BIOLOGICAL IMPORTANCE IN GREATER MANCHESTER
Greater Manchester Ecology Unit
Ryecroft Hall, Manchester Road, Audenshaw, Manchester M34 5ZJ
(Private & Confidential)

SITE NAME : Ashton Canal (West)		**DISTRICT** : Manchester
LOCATION : Openshaw to Ancoats	**GRID REF** : SJ890979 – SJ848981	**GRADE** : A

SITE DESCRIPTION

Navigable canal, dredged in early 1970's and reopened in 1974, important for its submerged aquatic flora, despite reasonably heavy usage.

The canal contains locally abundant perfoliate pondweed, curly pondweed, hair-like pondweed, broad-leaved pondweed, fennel pondweed, Nuttall's pondweed, spiked water milfoil, least bur-reed, arrowhead and common water plantain. Water violet has also been recorded from one location. The European Protected Species floating water plantain (*Luronium natans*) is also present in the canal.

Fringing vegetation recorded includes marsh woundwort, water mint, angelica, broad buckler fern, water forget-me-not, fool's watercress, gipsywort, common skullcap, reed sweet-grass, bulrush (*Typha latifolia*), great hairy willowherb, remote sedge, ground elder and nettle. The invasive Japanese knotweed has also been recorded.

An arm of the canal called the Islington Branch was found to support populations of both floating water plantain and the nationally scarce grasswrack pondweed as well as arrowhead, broad-leaved pondweed and least bur-reed and has been included within the SBI boundary. Both floating water plantain and grasswrack pondweed are UK Priority Biodiversity Species. Grasswrack pondweed has also been located at Ducie Wharf in 2001.

The canal is said to be rich in invertebrate life, with common blue damselfly, blue-tailed damselfly, large brown hawker, emperor dragonfly and broad bodied chaser dragonfly recorded. Other invertebrates recorded include great ramshorn snail, wandering snail, mayfly, water louse, pond skater, water boatman, leaches, watermite and various species of water flea. Small copper and large white butterflies have also been recorded.

Birds observed during the current site visit include moorhen and Canada goose. Fish recorded include perch, tench, roach, bream, carp, chubb and occasional pike. There are reports of breeding smooth newt.

The habitat figures given are an approximation and are only intended to give an indication of the relative proportions of each habitat.

SITES OF BIOLOGICAL IMPORTANCE IN GREATER MANCHESTER
GREATER MANCHESTER ECOLOGY UNIT
Ryecroft Hall, Manchester Road, Audenshaw, Manchester M34 5ZJ
(PRIVATE & CONFIDENTIAL)

SITE NAME : Ashton Canal (West)			**DISTRICT** : Manchester
LOCATION : Openshaw to Ancoats			**GRID REF** : SJ890979 – SJ848981
GRADE : A	**AREA (HA)** : 8.5 (5km)	**ALTITUDE (M)** : 60-80	**DATE** : 21.5.01
STATUS :	**SURVEYOR** : S Waymont		**INITIAL SURVEY DATE** : 9.6.85
NO OF REVISIONS : 3	**OWNER** : BW		**DISTRICT REF** : F34

HABITATS PRESENT	**Area (ha)**	**FEATURES OF INTEREST**	**Importance**
Woodland broadleaved (semi-nat)		Vegetation type	3
Woodland plantation		Ferns	1
Scrub		Bryophytes	
Acid grassland	0.1	Fungi	
Neutral/basic grass (species-rich)		Mammals	
Neutral/basic grass	1.9	Birds	1
Tall herbaceous		Amphibia	1
Ericaceous heath		Reptiles	
Bog		Lepidoptera	1
Marsh/fen	0.1	Odonata	2
Reedbed	1.0	Other invertebrates	2
Lake/pond/dam		Geological	
Canal	5.4	Other: fish	1
River/stream/ditch		Other	
Quarry/cliff/rock/wall			
Ruderal			
Other			

AREA Areas of habitat covering less than 0.1ha. recorded as 0.01	**IMPORTANCE** Blank - Not known 1 - Small but significant 2 - Substantial 3 - Great

COMPLETE FOR GAINS AND PARTIAL LOSSES ONLY

Loss since Last Survey : 0	Loss since First Survey : 9.0
Primary cause :	Secondary cause :
Gain since Last Survey : 6.2	Gain since First Survey : 6.2
Primary cause : Technical gain – more accurate mapping tool	Secondary cause : Resurvey
Net change since Last Survey : +6.2	Net change since First Survey : -2.8

SITES OF BIOLOGICAL IMPORTANCE IN GREATER MANCHESTER
Greater Manchester Ecology Unit
Ryecroft Hall, Manchester Road, Audenshaw, Manchester M34 5ZJ
(Private & Confidential)

Site Name : Ashton Canal (West)		**District** : Manchester
Location : Openshaw - Ancoats	**Grid Ref** : SJ890979 – SJ848981	**Grade** : A

SITE LOCATION MAP (1:25000)

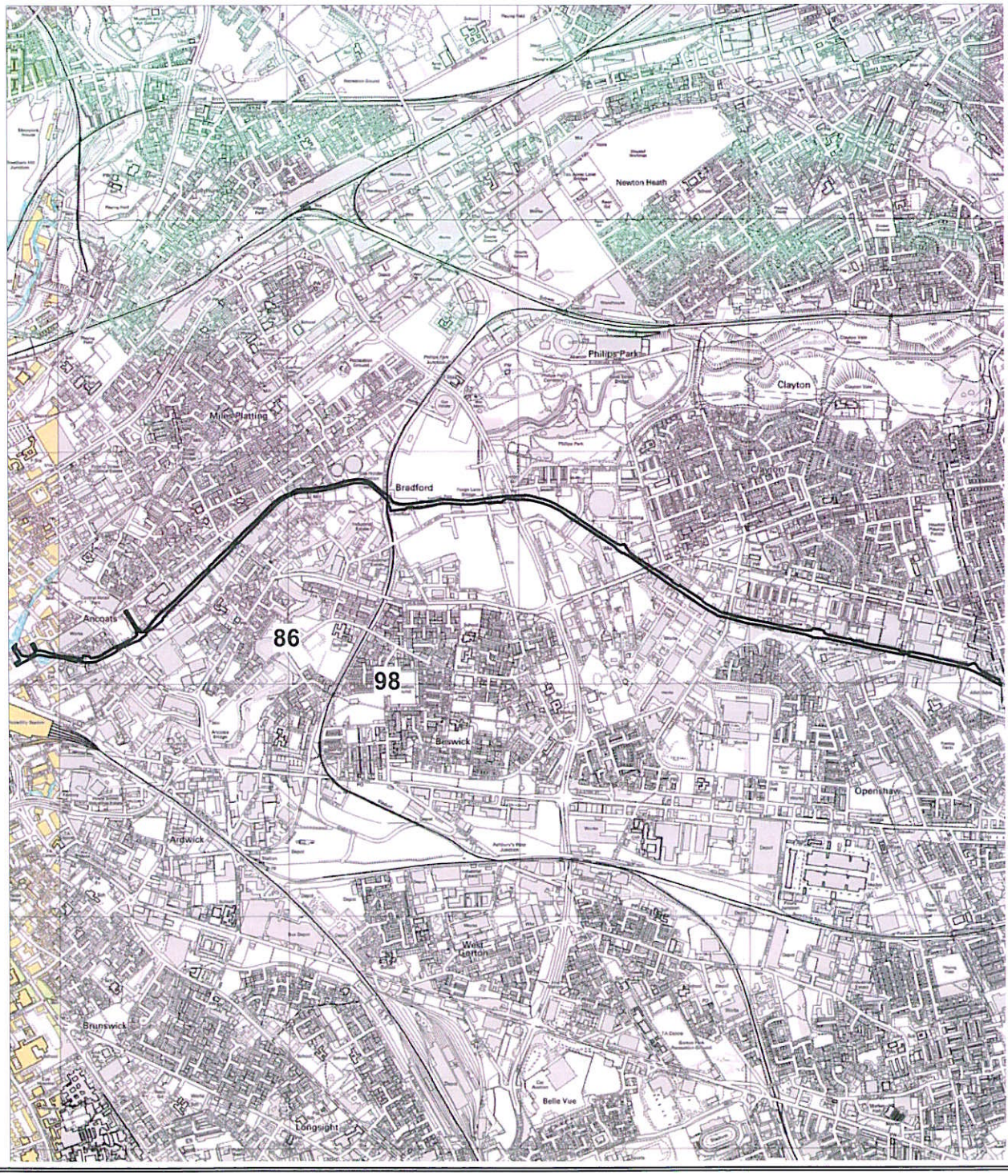

CD: SBI MAPS/CURRENT SBI MAPS/F34-MANCHESTER/F34-4

Date: 21.5.01

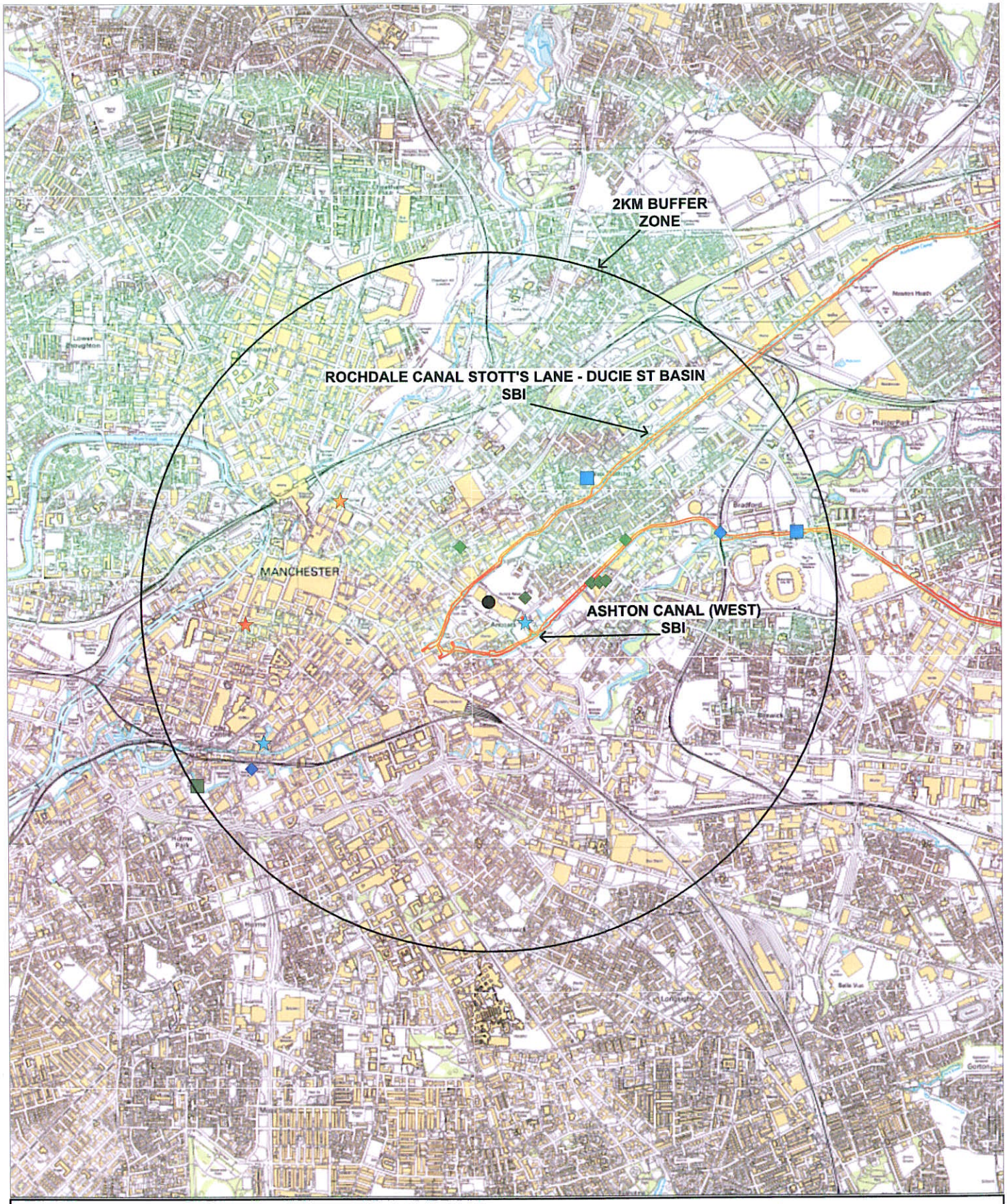

KEY

- COMMON PIPISTRELLE RECORD
- COMMON PIPISTRELLE ROOST
- PIPISTRELLE SP. RECORD
- PIPISTRELLE SP. ROOST
- BLACK REDSTART RECORD
- GRASSWRACK PONDWEED RECORD

GREATER MANCHESTER ECOLOGY UNIT
ECOLOGICAL SEARCH - ANCOATS GR SJ 851984
SCALE 1:20000

Greater Manchester Ecology Unit
Telephone 0161 371 9171
Email: gmeu@tameside.gov.uk
Date Produced: 16th June 2009

APPENDIX C – Utilities

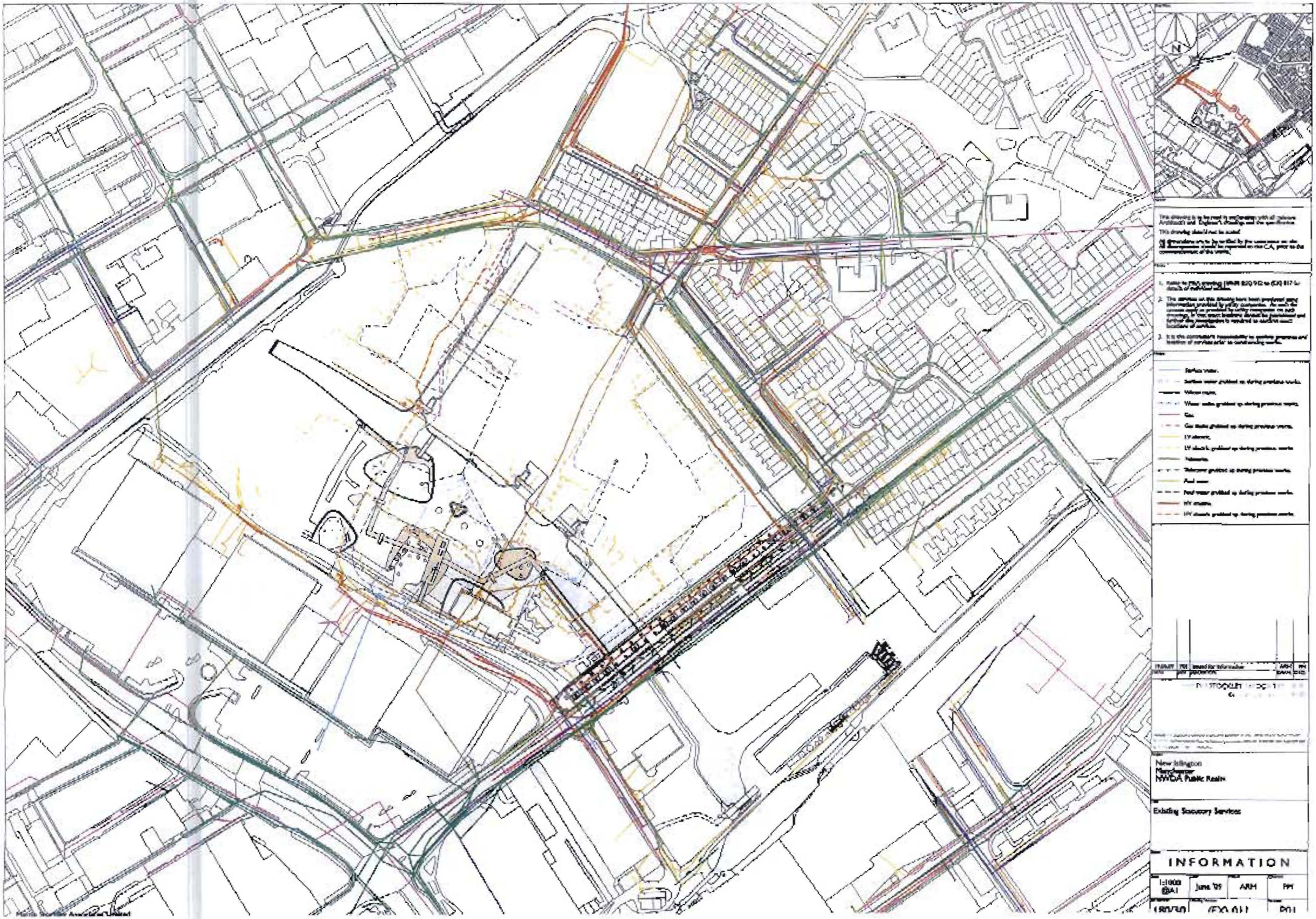
N
New Islington
Manchester
NMCA Public Realm
Existing Secondary Services
INFORMATION
1:1000 @A1
June '09
ARH
PH

APPENDIX D – Additional Supporting Drawings

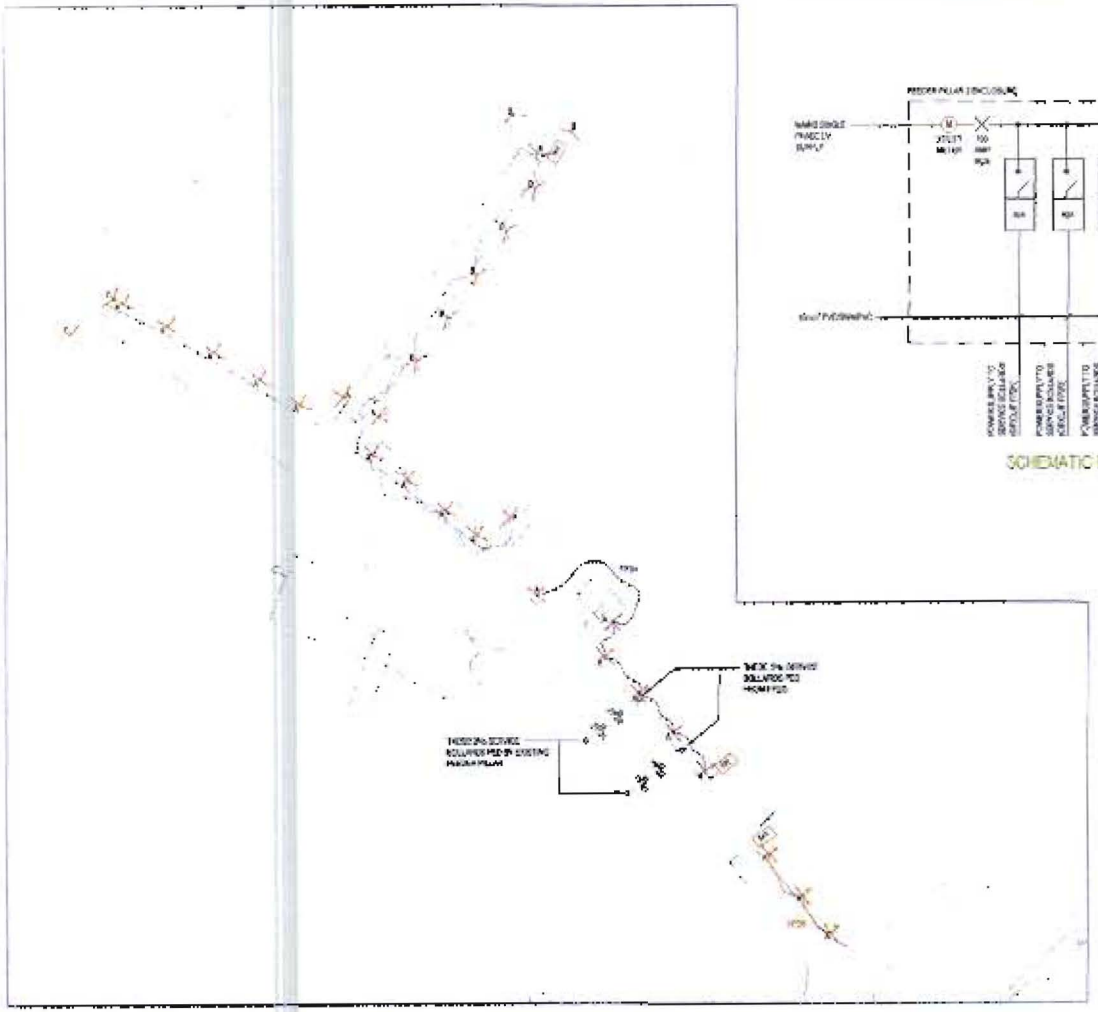

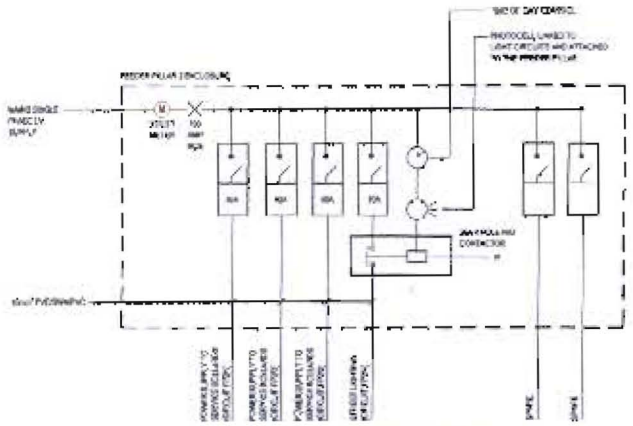

SCHEMATIC DIAGRAM - FEEDER PILLAR 2

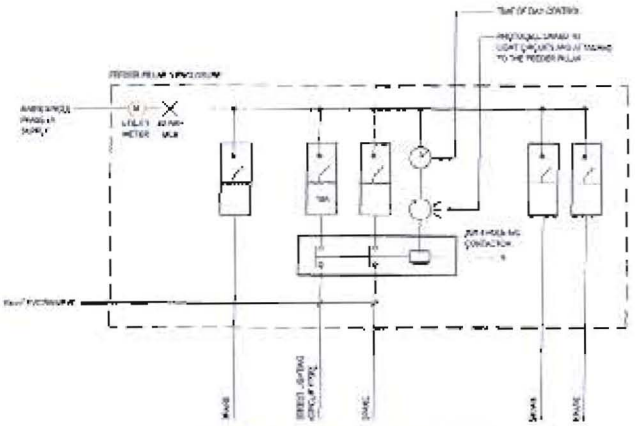

SCHEMATIC DIAGRAM - FEEDER PILLAR 3

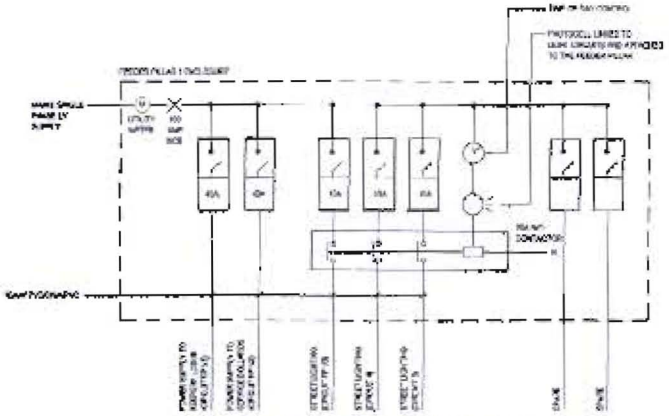

SCHEMATIC DIAGRAM - FEEDER PILLAR 1

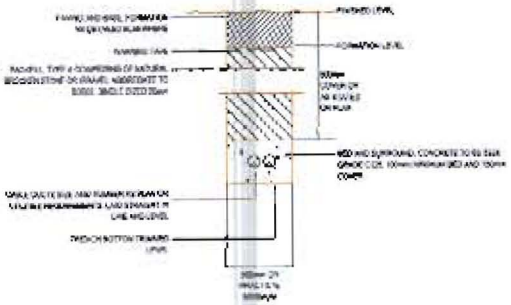

DETAIL 3 - ELECTRICAL CABLE DUCTS PAVED AREAS

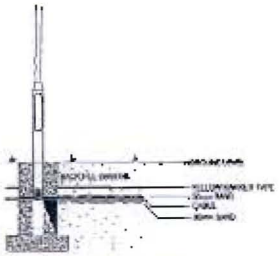

DETAIL 2 - TYPICAL LIGHTING COLUMN DETAIL

LEGEND

	FEEDER PILLAR
	8M OLD SCOTSMAN COLUMN WITH 2No 35W OLVMD GRANGE LANTERNS OR MINIGRAND OPTIC AND STEPPED BRACKETS BY WOODFORDS
	6M LAMPSTEM COLUMN WITH 2No 35W OLVMD GRANGE LANTERNS OR MINIGRAND OPTIC AND STEPPED BRACKETS BY WOODFORDS
	8M OLD SCOTSMAN COLUMN WITH 2No 150W OLVMD GRANGE LANTERNS OR MINIGRAND OPTIC AND FLETTED BRACKETS BY WOODFORDS
	100mm DUCTING
	600x600mm SPARE PIT

NOTES

1. ALL SERVICE ROUTES DETAILED ARE APPROXIMATE. THE CONTRACTOR SHALL BE RESPONSIBLE FOR DETERMINING THE EXACT ROUTES AND LOCATIONS OF ALL AVAILABLE SERVICES AND EQUIPMENT.

2. THE EXACT POSITION OF ALL SERVICES AND EQUIPMENT SHALL BE AGREED BY THE CONTRACT ADMINISTRATOR.

3. THE CONTRACTOR SHALL BE RESPONSIBLE FOR FULLY COORDINATING ALL SERVICES INSTALLED AND SUPPLIED BETWEEN ALL TRADES.

4. THIS DRAWING SHALL BE READ IN CONJUNCTION WITH ALL MECHANICAL, ELECTRICAL, ARCHITECTURAL AND STRUCTURAL DRAWINGS, QUANTITY DOCUMENTATION AND SPECIFICATION FOR THE WORKS.

5. THIS DRAWING FORMS PART OF THE SPECIFICATION AND SHALL BE READ FOR THE WORKS.

6. ALL DIMENSIONS GIVEN ARE IN MILLIMETRES.

7. ALL INSTALLATIONS SHALL COMPLY WITH THE 17TH EDITION OF THE IEE WIRING REGULATIONS.

8. EXISTING FOR LIGHTING AND SERVICE INSTALLATIONS MAY REQUIRE MINOR MODIFICATIONS. THESE MAY INCLUDE SHALL ALSO BE MADE FOR DRAIN WIRE ACCESS.

9. ALL EXISTING SPARE WIRE AVAILABLE DRAIN WIRES LAYED WITH THE DUCTING FOR THE SPECIFIED CABLES AND A 50 AMP 4 SPARE DRAIN WIRES FOR FUTURE MODIFICATIONS.

10. UPON COMPLETION OF THE WORKS, THE CONTRACTOR SHALL PROVIDE AS FITTED DRAWINGS AND MANUALS. THE CONTRACTOR SHALL ALSO BE RESPONSIBLE TO INVITE THE INSPECTOR, TESTING & COMMISSIONING AND SETTING TO WORK THE NECESSARY INSTALLATIONS.

11. EACH PHASE ROUTE SHALL BE SUPPLIED WITH A SEALING PROOF METER AND SHALL BE POSITIONED IN A VISUAL BOX.

Rev.	Date	Revision	By	Check
0	22.06.09	PRELIMINARY ISSUE	AT	AA

BCM

6th Floor, Portland Tower,
Portland Street,
Manchester,
M1 3LF

Telephone - 0161 228 7013
Facsimile - 0161 228 1788
www.bcmconsulting.co.uk

Client: NEW ISLINGTON MANCHESTER

Drawing title: PROPOSED LIGHTING LAYOUT

Date:	JUN 09	Scale:	1:1000 @ A1
Drawn:	AP	Checked:	AA
Job No:	10398	Drawing No:	E.001
		Rev:	0

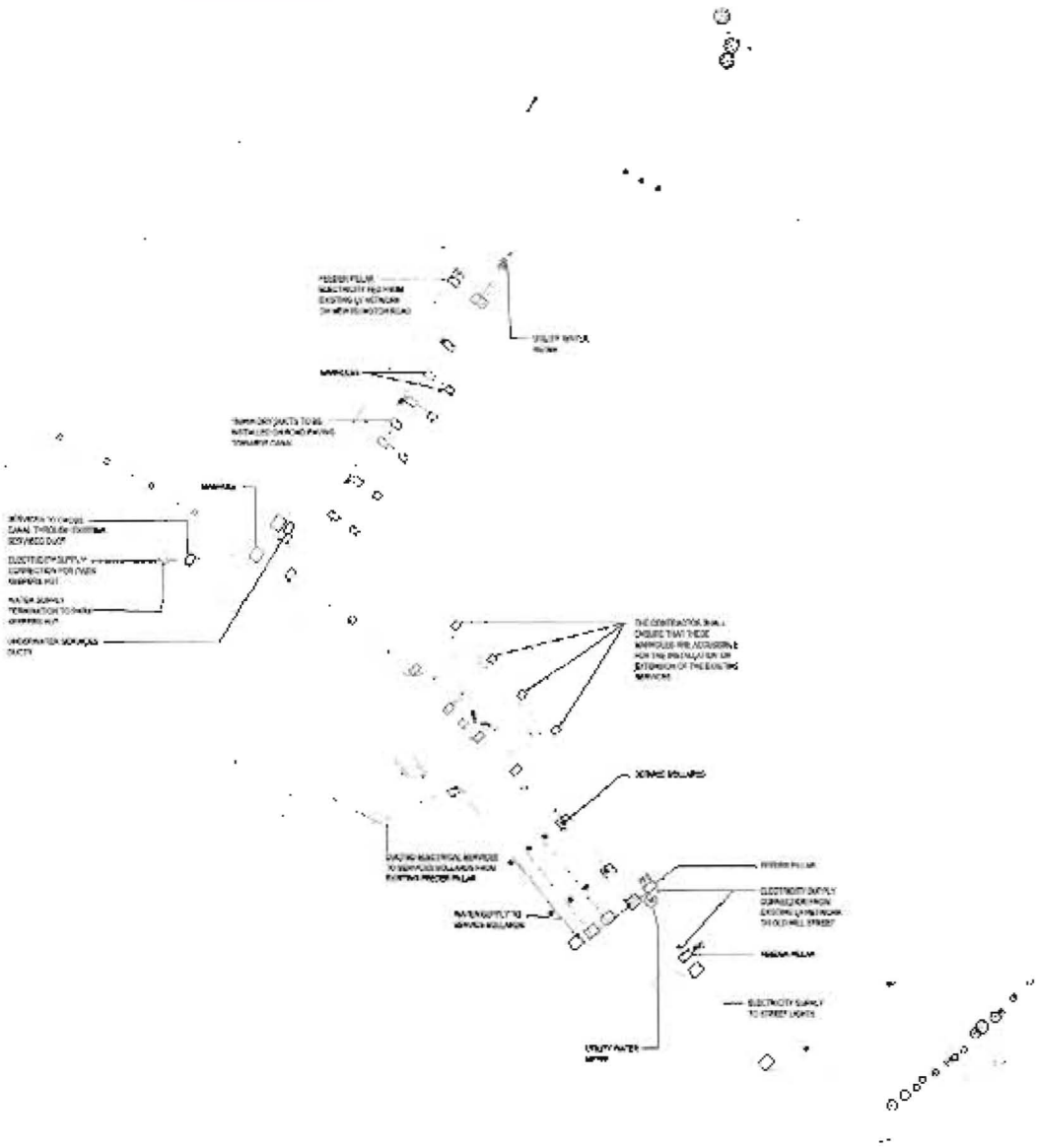

OS 385215, 398465

NOTES

STREET LIGHTING

1. THE CONTRACTOR SHALL PROVIDE ACCESS MANHOLES TO ALLOW LIGHT COLUMNS TO PROVIDE A LOOP IN METHOD OF CONNECTION TO EACH COLUMN. THESE MANHOLES SHALL BE SHALLOW. THE EXTERNAL CABLES SHALL BE TERMINATED AT A FUSED OUT OUT AT THE BASE OF EACH COLUMN.
2. THE COLUMNS SHALL BE INSTALLED WITH SINGLE FOUNTAIN CABLE CONNECTION AS DETAILED BY THE LIGHTING TURNKEY.
3. TYPICAL ROUTES OF CABLE WITH AN INSTALLATION SCHEMATIC OF THE INSTALLATION ARE SHOWN. THESE CAN BE VARIED IN AGREEMENT WITH BCM, THE LIGHTING TURNKEY ENGINEER.
4. ALL INSTALLATIONS SHALL COMPLY WITH THE REQUIREMENTS OF THE CURRENT IEE REGULATIONS.
5. THE COLUMNS MAY BEST POSITIONED TO PROVIDE THE REQUIRED ILLUMINATION LEVELS AND UNIFORMITY ACROSS THE PUBLIC REALM. VARIATION IN THE POSITIONS MUST BE AGREED WITH BCM, THE CONSULTANT ENGINEER.

SERVICE BOLLARDS

1. ALL POWER SUPPLIES TO THE SERVICE BOLLARDS MUST BE PROTECTED WITH 20A MCB INSTALLED BELOW THE DB.
2. EACH SERVICE BOLLARD SHALL BE FITTED WITH A SINGLE MCB TO BS EN 60898.
3. THE CONTRACTOR SHALL ENSURE THAT THE SERVICE BOLLARDS ARE LOCATED AS APPROPRIATE.
4. ELECTRICAL SUPPLIES TO SERVICE BOLLARDS SHALL COMPLY WITH THE REQUIREMENTS OF THE IEE ISSUE.

PARK KEEPERS HUT

1. POWER SUPPLY TO THE PARK KEEPERS HUT SHALL COME FROM FEEDER PILLAR 1.
2. THE POWER SUPPLY CABLE SHALL BE TERMINATED IN AN INSTALLED 16A MCB BOX.
3. THE SUPPLY SHALL BE TERMINATED IN A CONSUMER UNIT COMPLETE WITH A TRIPLE POLE MCB LOCATED WITHIN THE PARK KEEPERS HUT.

OUTER HUTT DEVELOPMENT

1. THE CONTRACTOR SHALL ENSURE THAT THE ELECTRICITY AND WATER SUPPLY DUCTS MEET THE REQUIRED SPECIFICATION OF THE UTILITY PROVIDERS.
2. MANHOLES / TRANSITS PITS SHALL BE INSTALLED AS SHOWN IN BCM'S SERVICES STRATEGY DRAWING.

LEGEND

	TRIPLE DUCT
	STREET LIGHTING DUCT
	WATER PIPE DUCT
	ELECTRICITY SUPPLY TO HUT
	PARK LOW VOLTAGE SUPPLY TO SERVICE BOLLARDS
	SERVICE BOLLARDS

Rev.	Date	Description	Drn	Check
4	[illegible]	PRELIMINARY ISSUE	DET	AA

BCM
9th Floor, Portland Tower,
Portland Street,
Manchester,
M1 3LF
Telephone - 0161 228 7913
Facsimile - 0161 228 1788
www.bcmconsulting.co.uk

Project
NEW ISLINGTON
MANCHESTER

Drawing title
PROPOSED SERVICES ROUTE LAYOUT

Date	JUN 2009	Scale	1:1000 @ A1
Drawn	DET	Checked	AA
Job No.	10398	Drawing No.	LX001
		Rev.	0